Project # 60-10-023

INTERSECTION SAFETY CAMERA INSTALLATIONS

CEDAR RAPIDS, IOWA

1st Ave E (IA 922/Bus 151) & 10th St SE
2nd Ave SE & 10th St SE
6th St SW & 2nd Ave SW
Edgewood Rd NE & 42nd St NE

FINAL PLANS

All construction shall be in accordance with the Cedar Rapids Metro Area Design Standards

Approved Design Exceptions:

Breakaway Poles at Min. 5' from back of curb.

INDEX OF SHEETS

NO.	DESCRIPTION
A	Title Sheet
B	Typical Section & Traffic Control
1	1st Ave E & 10th St SE – Camera Locations
2	1st Ave E & 10th St SE – Wiring Diagram
3	2nd Ave SW & 6th St SW – Camera Locations
4	2nd Ave SW & 6th St SW – Wiring Diagram
5	42nd St NE & Edgewood Rd NE – Camera Locations
6	42nd St NE & Edgewood Rd NE – Wiring Diagram
7	2nd Ave SE & 10th St SE – Camera Locations
8	2nd Ave SE & 10th St SE – Wiring Diagram
9	Camera Pole Details
10	Concete Foundation and Power Service Details
11	Handhole and Sign Details

UTILITY AND EMERGENCY PHONE NUMBERS

CITY OF CEDAR RAPIDS, IOWA	
ENGINEERING DIVISION	(319) 286 - 5802
TRAFFIC ENGINEERING DIVISION	(319) 286 - 5802
POLICE DEPARTMENT	
BUSINESS	(319) 286 - 5491
EMERGENCY	911
FIRE DEPARTMENT	
BUSINESS	(319) 286 - 5200
EMERGENCY	911
WATER DEPARTMENT	(319) 286 - 5910
SEWER MAINTENANCE	(319) 286 - 5815
ONE CALL (UTILITIES)	(800) 292 - 8989
IOWA DEPARTMENT OF TRANSPORTATION	
DISTRICT ENGINEER	(319) 364 - 0235
MAINTENANCE GARAGES	(319) 365 - 3558
MEDIACOM	(319) 395 - 9699
McLEODUSA	(888) 404 - 6779
MCI WORLDCOM	(319) 375 - 1857
MID AMERICAN ENERGY	(319) 298 - 5162
QWEST	(319) 399 - 7407
ALLIANT ENERGY	(800) 255 - 4268

LOCATION MAP NOT TO SCALE

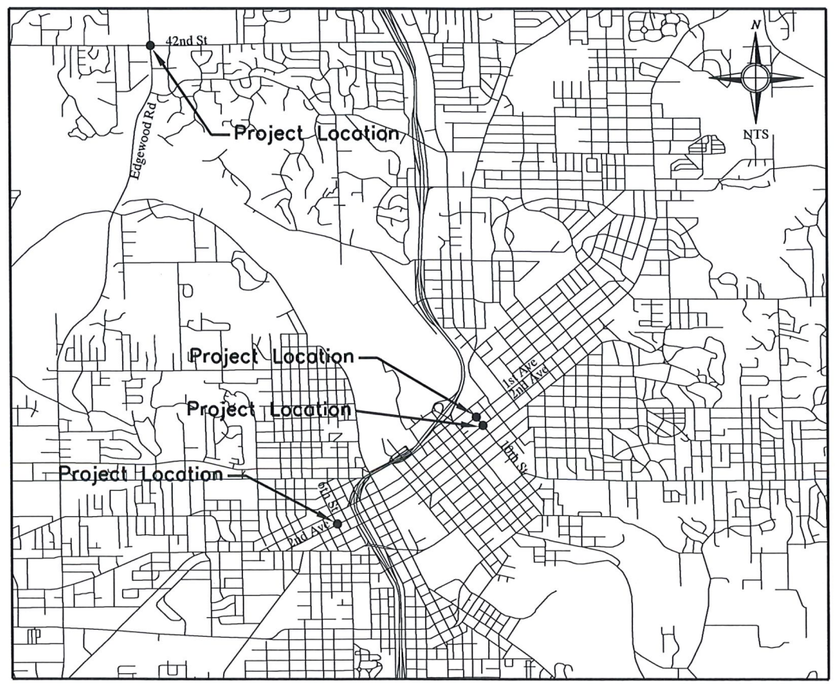

CITY OF CEDAR RAPIDS

This Engineering Document is approved.

City Engineer APPROVED — Date 12/7/09

LICENSED PROFESSIONAL ENGINEER TIMOTHY P. MROCH 19524 IOWA

I hereby certify that this Engineering document was prepared by me or under my direct personal supervision and that I am a duly Licensed Engineer under the laws of the State of Iowa.

Timothy P. Mroch Iowa Reg No. 19524

My License renewal date is December 31, 2010

Pages covered by this seal: ALL

RECEIVED DEC 11 2009 City Of Cedar Rapids Public Works Dept.

Client: GATSO USA
8341 E. EVANS ROAD, SUITE 104
SCOTTSDALE, AZ 85260

Anderson-Bogert
Engineers & Surveyors, Inc.
4001 River Ridge Drive N.E. Cedar Rapids, Iowa 52402
Phone: (319) 377-4629

T:\ACAD\209125\dwg\Sheets\A.dwg 12-07-09 10:40:09 AM tpm281

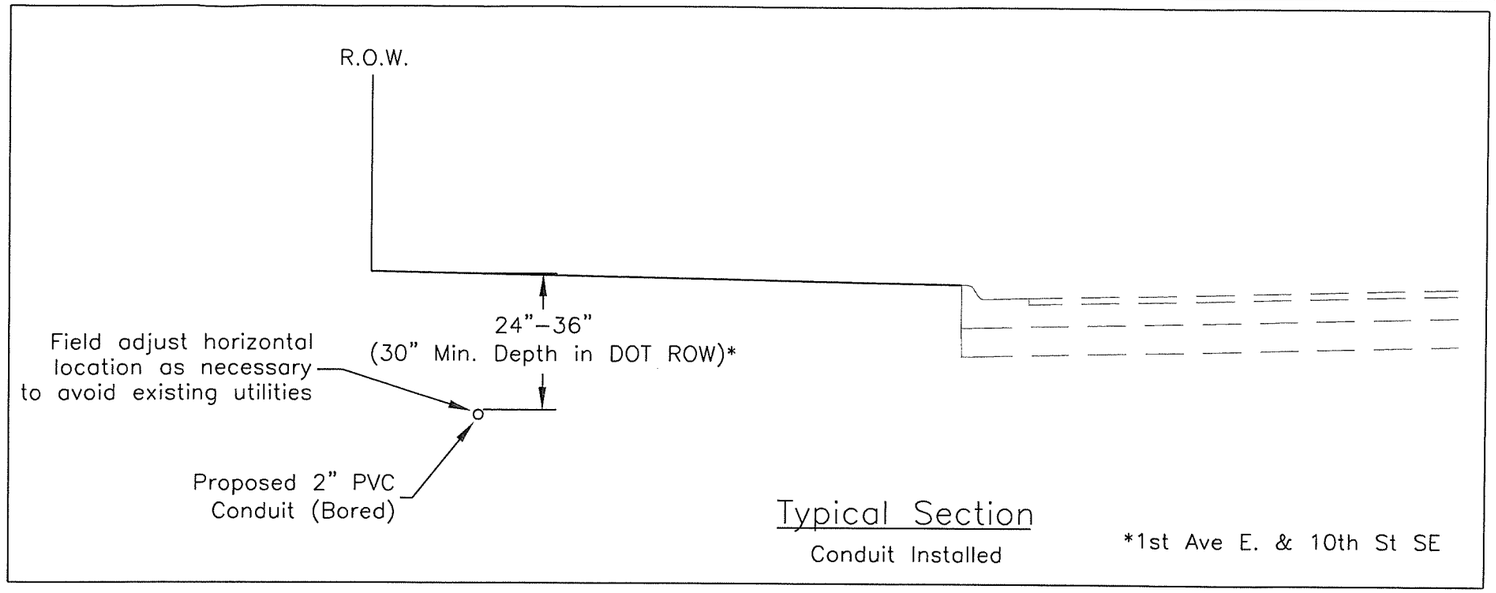

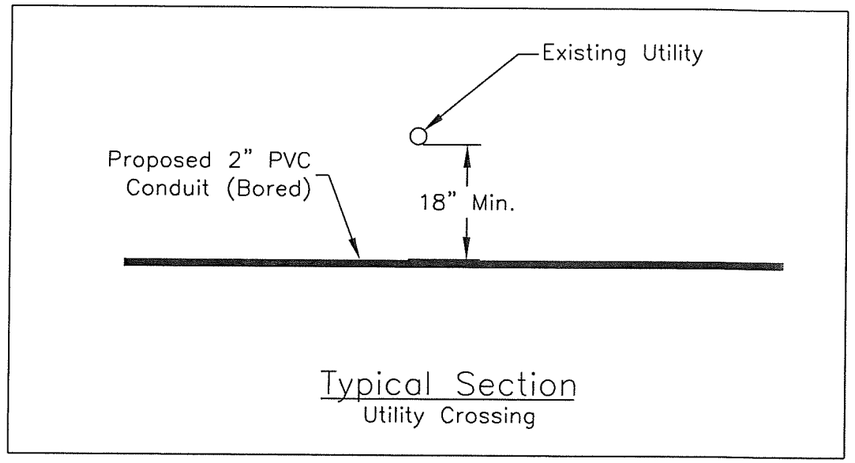

Traffic Control:

1st Avenue E & 10th Street SE

Use Iowa DOT Standard Road Plan TC–419 (Lane Closure on Undivided Highway).

6th Street SW & 2nd Avenue SW

Use CRMASD 1200–036 (construction in half of one way street) for lane closures on 2nd Avenue SW and CRMASD 1200–039 (construction in one lane of low speed 2 lane 2–way street without flagger) for lane closures on 6th Street SW.

Edgewood Road NE & 42nd Street NE

Use Iowa DOT Standard Road Plan TC–419 (Lane Closure on Undivided Highway).

10th Street SE & 2nd Avenue SE

Use CRMASD 1200–034 (construction in curb lane of multilane street).

Sidewalk closures, if necessary, shall be per CRMASD 1200–061 or 1200–060.

All traffic lanes shall be re–opened at the end of each work day.

Restoration of work area:

Restoration of work areas shall be included with the project. All roadway and sidewalk surfaces removed shall be replaced in kind. All damage to vegetated areas shall be seeded in accordance with the CRMASD.

Traffic control during signal blackout (<30 min.) shall be using a CR Police officer or Flagger. A power generator shall be used between old power supply disconnect and new supply connection. Signal blackout shall be conducted during non–peak times. Peak times are 7AM–9AM, 11AM–1PM and 4PM–6PM.

Cedar Rapids Metro Area Standard Details (CRMASD).

NO.	REVISION DESCRIPTION	APPROVED	DATE

Client: GATSO USA
8341 E. EVANS ROAD, SUITE 104
SCOTTSDALE, AZ 85260

Project #60–10–023

ANDERSON-BOGERT
Engineers & Surveyors, Inc.

Drawn By: TPM
Date: 11/2009
Project No. 209125
Approved By: JCM

Intersection Safety Camera Installation

Typical Sections & Traffic Control

SHEET NO. B OF

T:\ACAD\209125\dwg\Sheets\B.dwg 12-07-09 10:43:41 AM tpm281

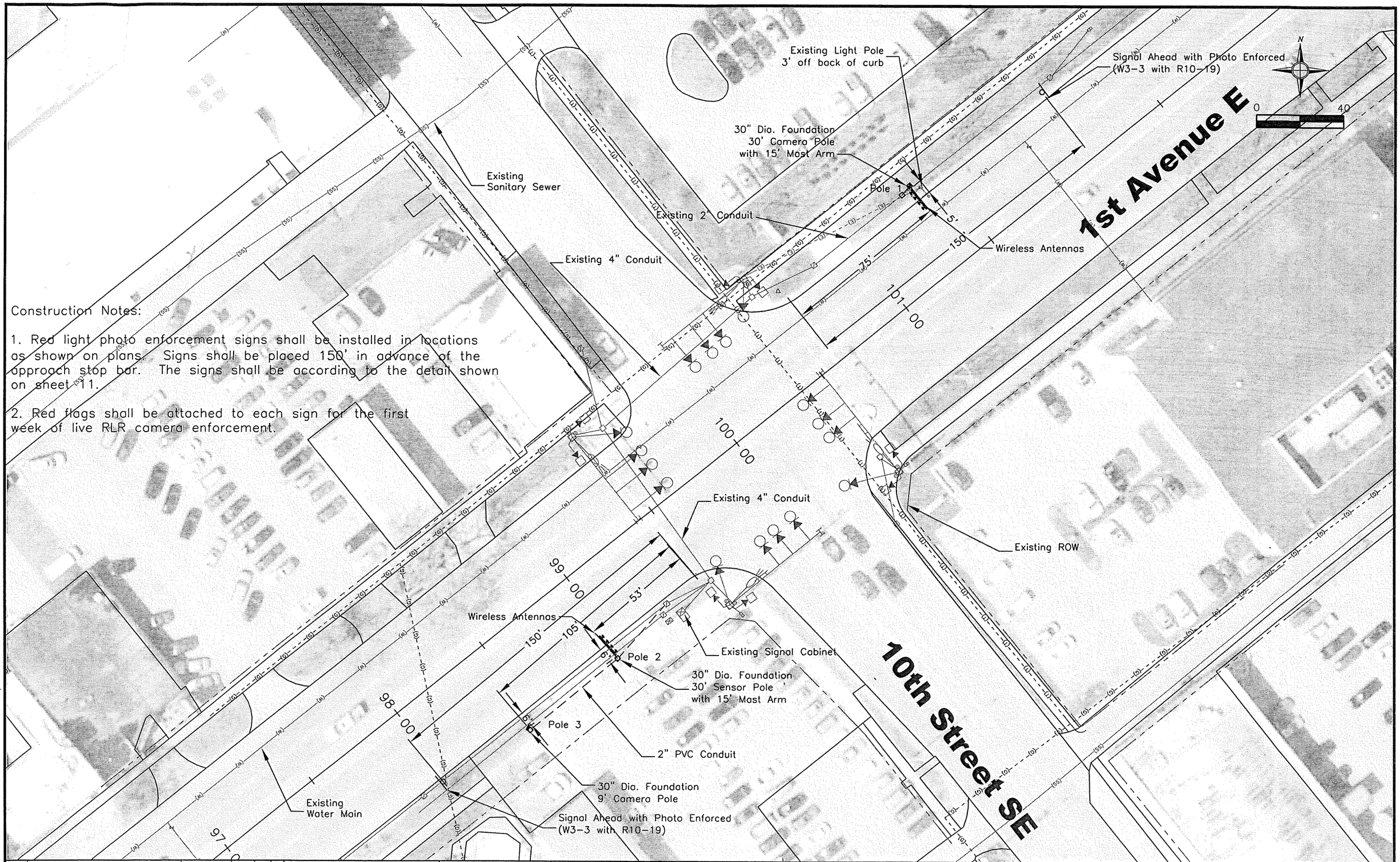

Construction Notes:

1. Red light photo enforcement signs shall be installed in locations as shown on plans. Signs shall be placed 150' in advance of the approach stop bar. The signs shall be according to the detail shown on sheet 11.

2. Red flags shall be attached to each sign for the first week of live RLR camera enforcement.

T:\ACAD\209125\dwg\Sheets\1st_10th.dwg 12-07-09 10:17:10 AM tpm281

NO.	REVISION DESCRIPTION	APPROVED	DATE

Client: GATSO USA
8341 E. EVANS ROAD, SUITE 104
SCOTTSDALE, AZ 85260

Project #60-10-023

ANDERSON-BOGERT
Engineers & Surveyors, Inc.

Drawn By: TPM
Date: 11/2009
Project No. 209125
Approved By: JCM

Intersection Safety
Camera Installation

1st Ave E & 10th St SE
Proposed Layout

SHEET NO. 1 OF 11

Construction Notes:

1. Signal change indications will be received through inductance coils attached to signal cables in the existing signal cabinet. No direct connections or splices are allowed.

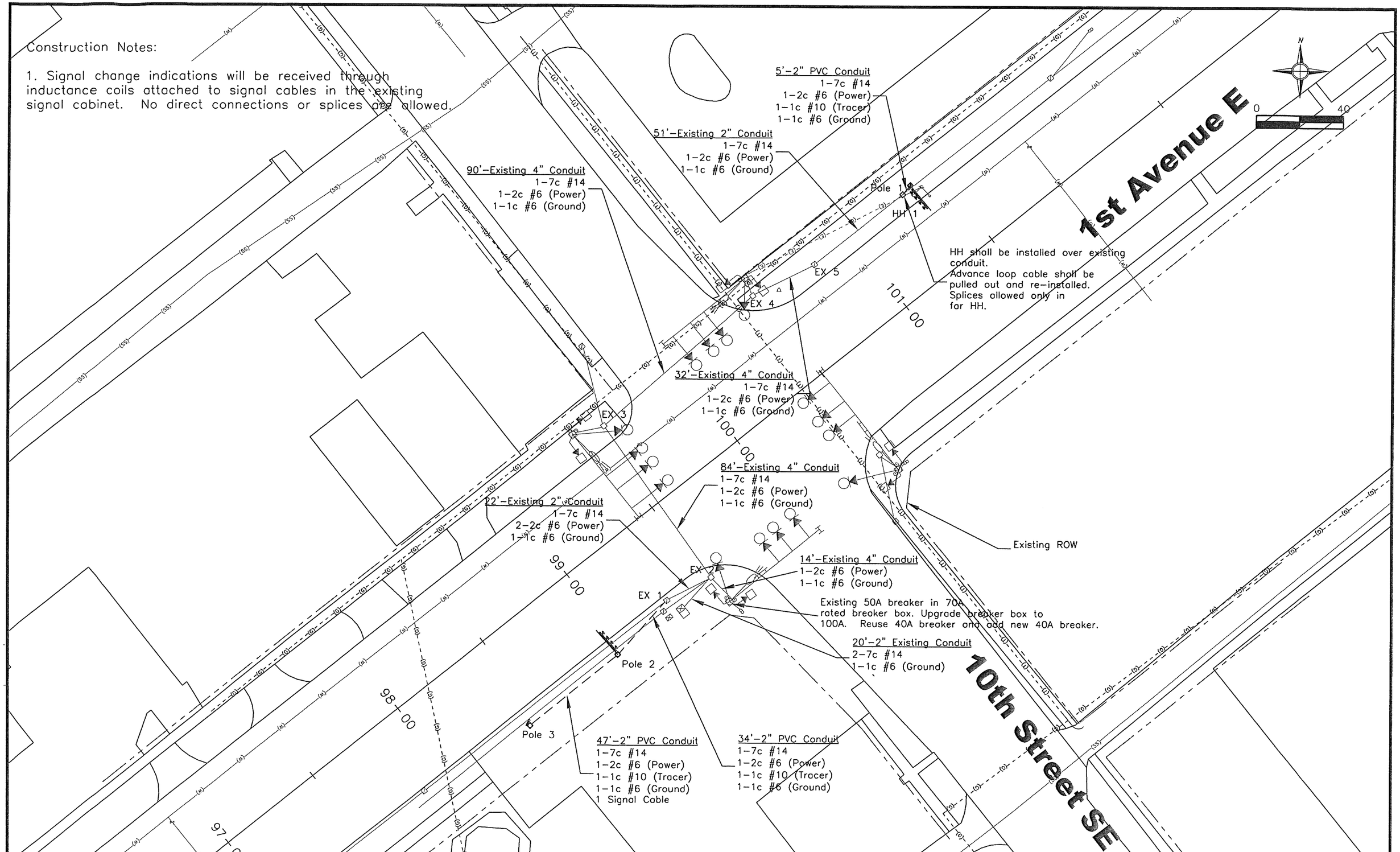

NO.	REVISION DESCRIPTION	APPROVED	DATE

Client: GATSO USA
8341 E. EVANS ROAD, SUITE 104
SCOTTSDALE, AZ 85260

Project #60-10-023

ANDERSON-BOGERT
Engineers & Surveyors, Inc.

Drawn By: TPM
Date: 11/2009
Project No. 209125
Approved By: JCM

Intersection Safety Camera Installation

1st Ave E & 10th St SE
Wiring Diagram

SHEET NO. 2 OF 11

T:\ACAD\209125\dwg\Sheets\1st_10th.dwg 12-07-09 10:17:52 AM tpm281

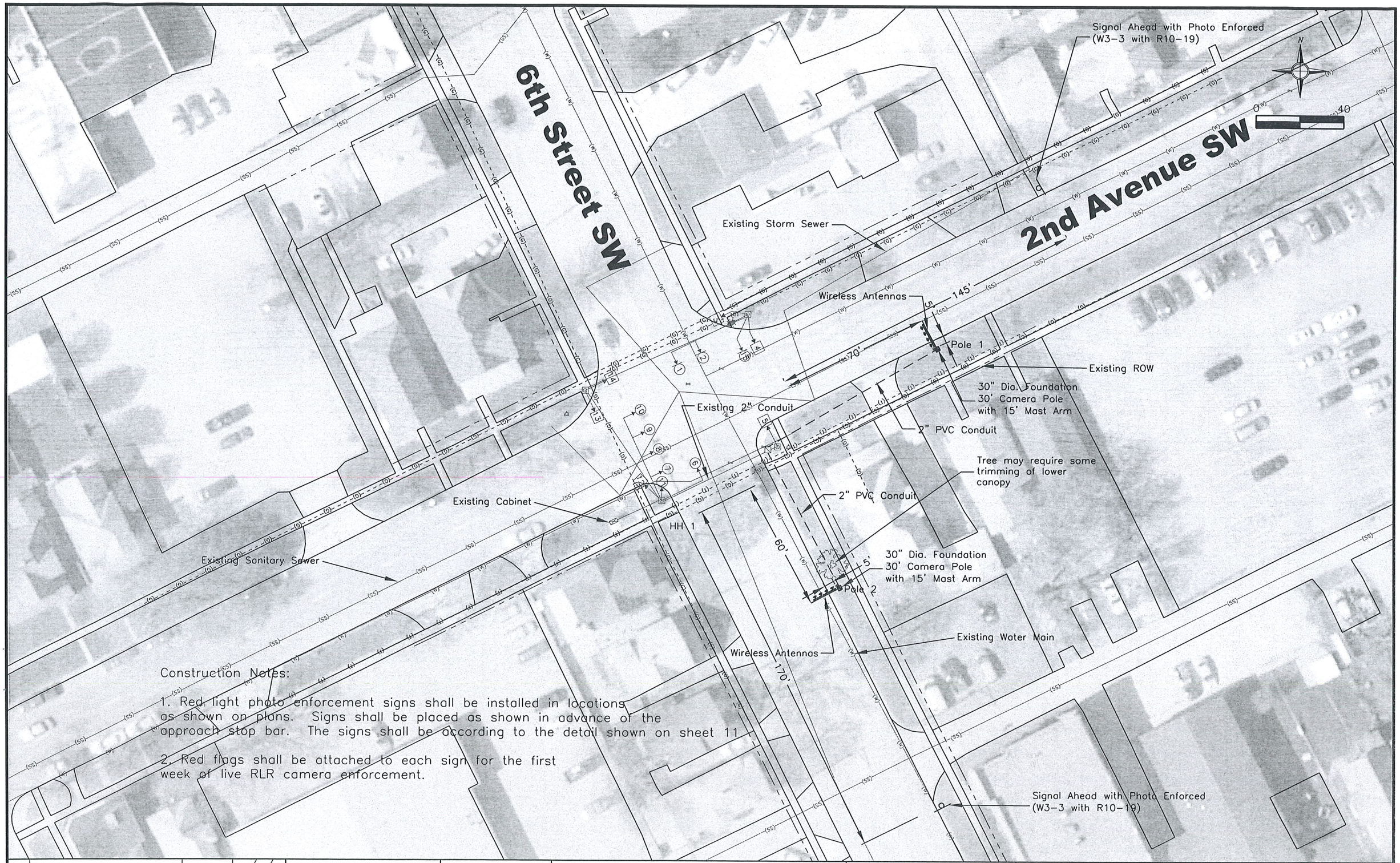

Construction Notes:

1. Red light photo enforcement signs shall be installed in locations as shown on plans. Signs shall be placed as shown in advance of the approach stop bar. The signs shall be according to the detail shown on sheet 11

2. Red flags shall be attached to each sign for the first week of live RLR camera enforcement.

NO.	REVISION DESCRIPTION	APPROVED	DATE

Client: GATSO USA
8341 E. EVANS ROAD, SUITE 104
SCOTTSDALE, AZ 85260

Project #60-10-023

ANDERSON-BOGERT
Engineers & Surveyors, Inc.

Drawn By: TPM
Date: 11/2009
Project No. 209125
Approved By: JCM

Intersection Safety
Camera Installation

2nd St SW & 6th Ave SW
Proposed Layout

SHEET NO. 3 OF 11

T:\ACAD\209125\dwg\Sheets\2nd_6th.dwg 12-07-09 10:26:23 AM tpm281

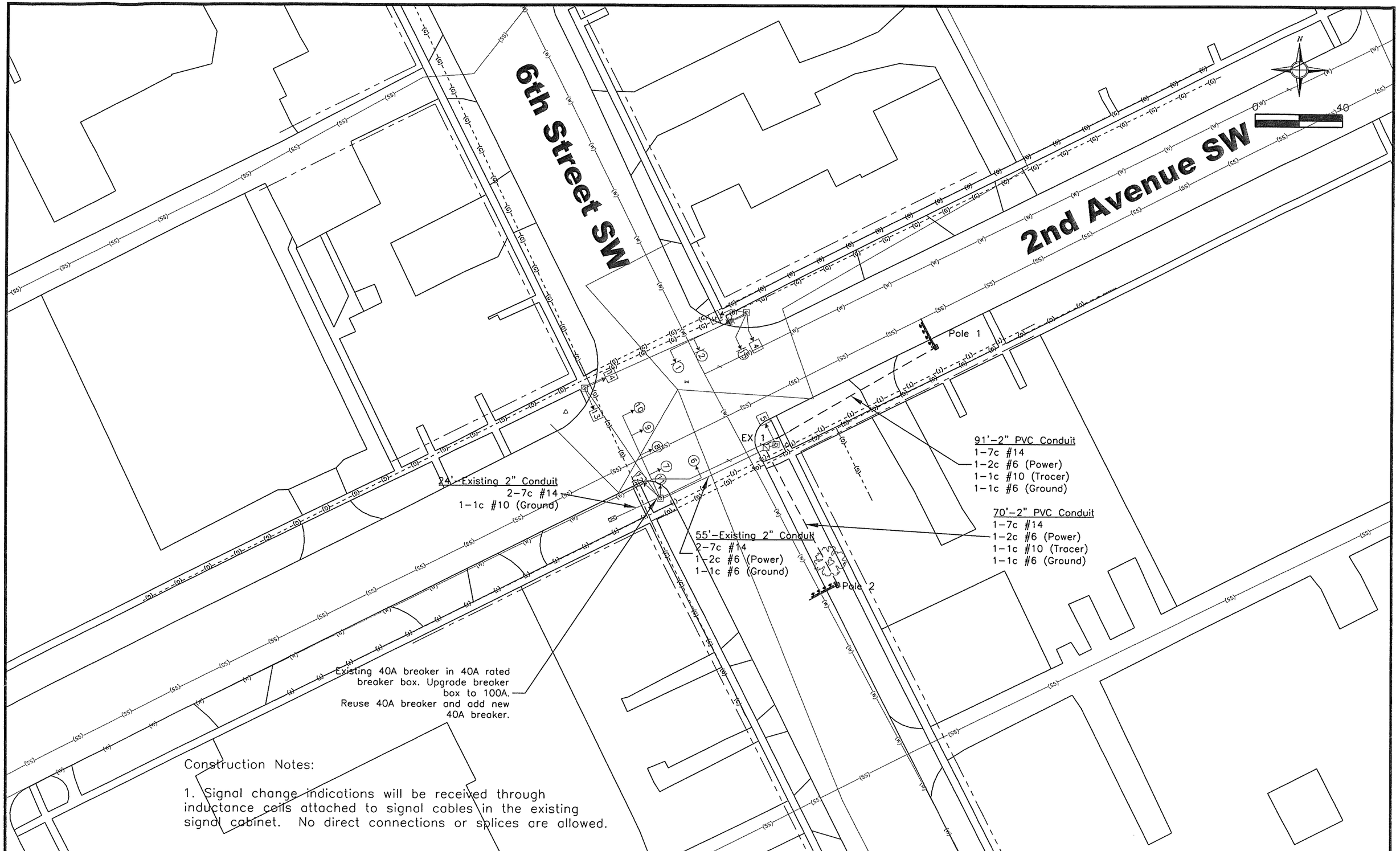

Construction Notes:

1. Signal change indications will be received through inductance coils attached to signal cables in the existing signal cabinet. No direct connections or splices are allowed.

NO.	REVISION DESCRIPTION	APPROVED	DATE

Client: GATSO USA
8341 E. EVANS ROAD, SUITE 104
SCOTTSDALE, AZ 85260

Project #60-10-023

ANDERSON-BOGERT
Engineers & Surveyors, Inc.

Drawn By: TPM
Approved By: JCM
Date: 11/2009
Project No. 209125

Intersection Safety Camera Installation

2nd St SW & 6th Ave SW
Wiring Diagram

SHEET NO. 4 OF 11

T:\ACAD\209125\dwg\Sheets\2nd_6th.dwg 12-07-09 10:27:00 AM tpm281

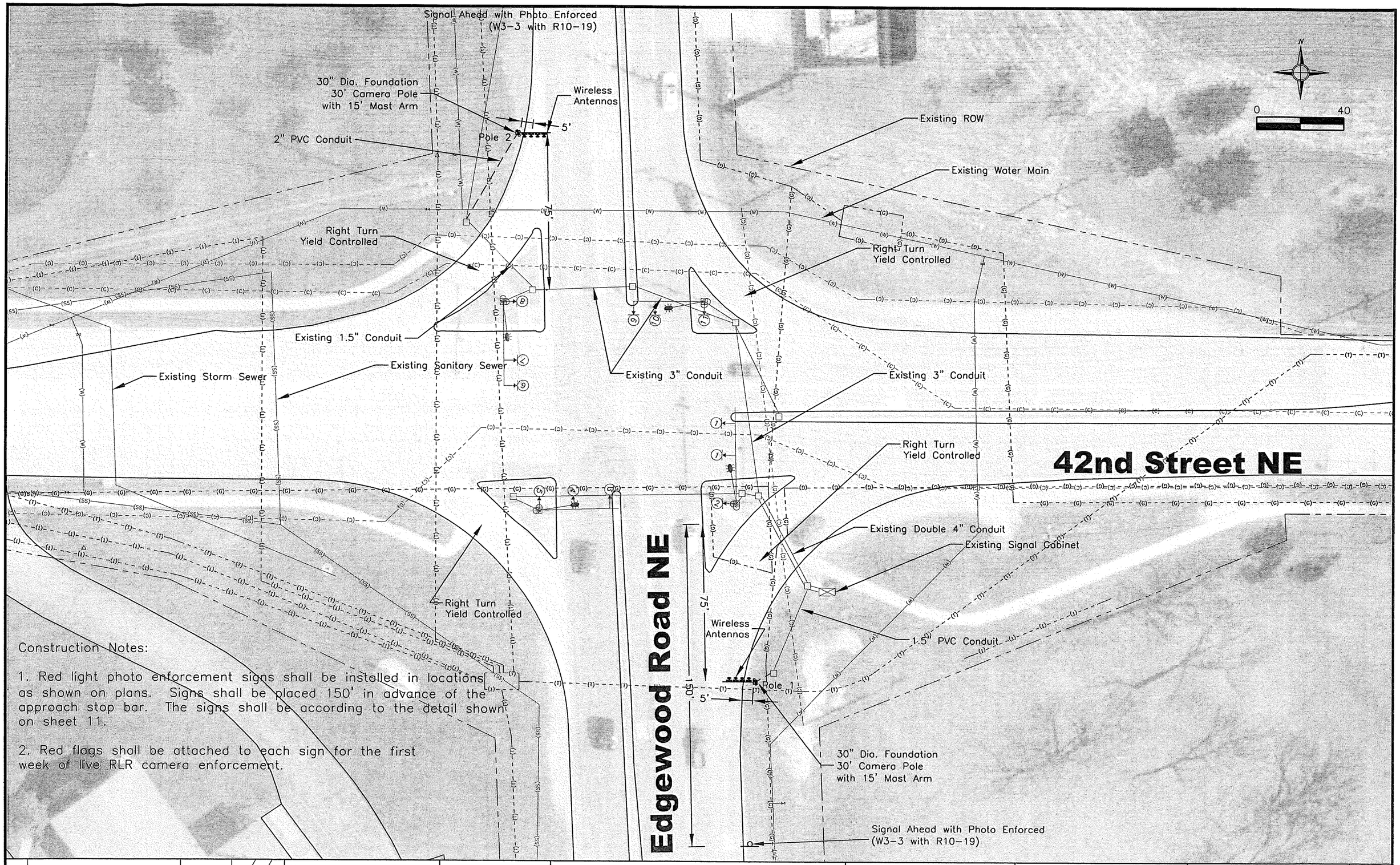

Construction Notes:

1. Red light photo enforcement signs shall be installed in locations as shown on plans. Signs shall be placed 150' in advance of the approach stop bar. The signs shall be according to the detail shown on sheet 11.

2. Red flags shall be attached to each sign for the first week of live RLR camera enforcement.

NO.	REVISION DESCRIPTION	APPROVED	DATE

Client: GATSO USA
8341 E. EVANS ROAD, SUITE 104
SCOTTSDALE, AZ 85260

Project #60-10-023

ANDERSON-BOGERT
Engineers & Surveyors, Inc.

Drawn By: TPM Approved By: JCM
Date: 11/2009
Project No. 209125

Intersection Safety Camera Installation

42nd St NE & Edgewood Rd NE
Proposed Layout

SHEET NO. 5 OF 11

T:\ACAD\209125\dwg\Sheets\42nd.dwg 12-07-09 10:28:55 AM tpm281

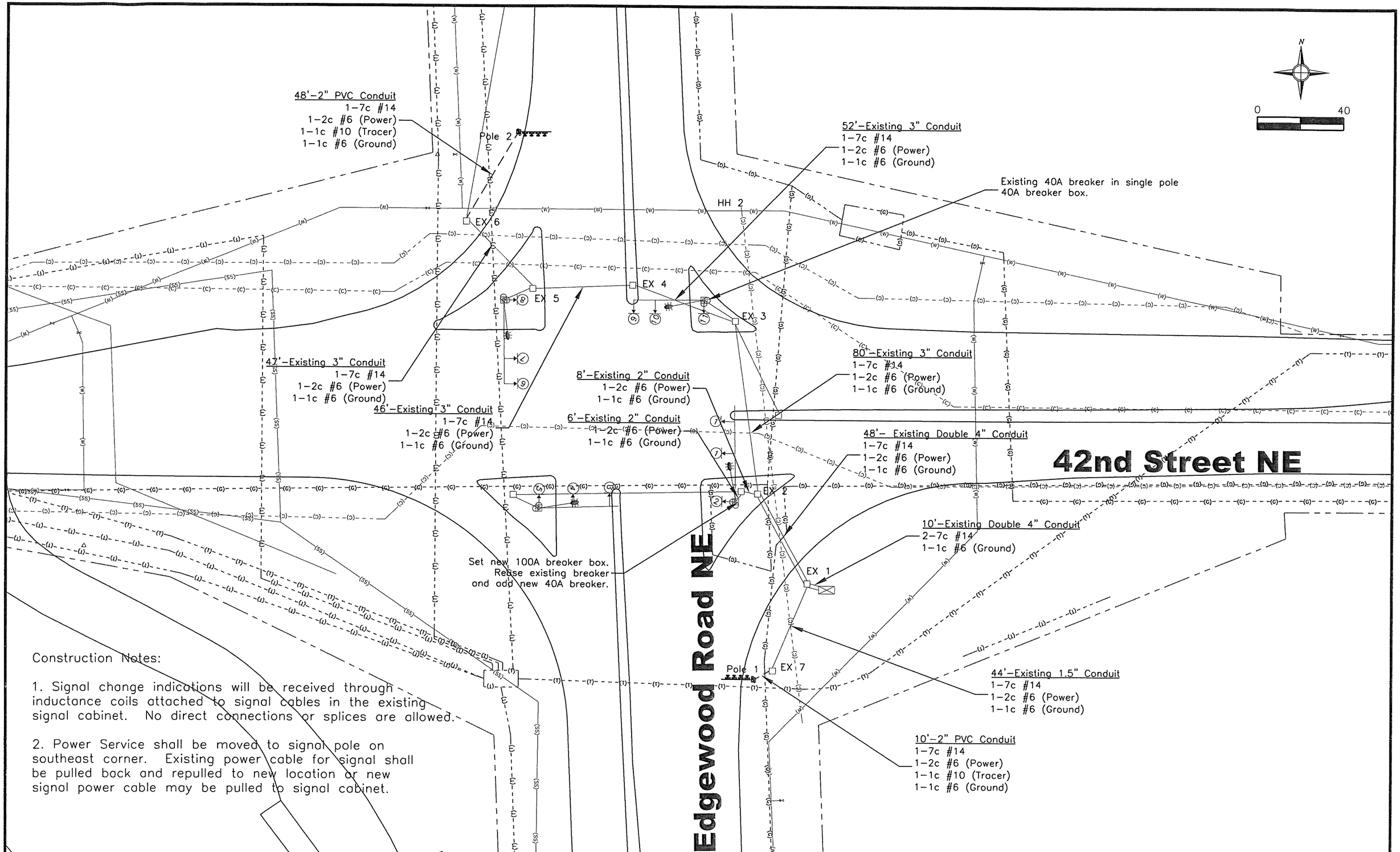

Construction Notes:

1. Signal change indications will be received through inductance coils attached to signal cables in the existing signal cabinet. No direct connections or splices are allowed.

2. Power Service shall be moved to signal pole on southeast corner. Existing power cable for signal shall be pulled back and repulled to new location or new signal power cable may be pulled to signal cabinet.

NO.	REVISION DESCRIPTION	APPROVED	DATE

Client: GATSO USA
8341 E. EVANS ROAD, SUITE 104
SCOTTSDALE, AZ 85260

Project #60-10-023

ANDERSON-BOGERT
Engineers & Surveyors, Inc.

Drawn By: TPM
Date: 11/2009
Project No. 209125
Approved By: JCM

Intersection Safety Camera Installation

42nd St NE & Edgewood Rd NE
Wiring Diagram

SHEET NO. 6 OF 11

T:\ACAD\209125\dwg\Sheets\42nd.dwg 12-07-09 10:36:13 AM tpm281

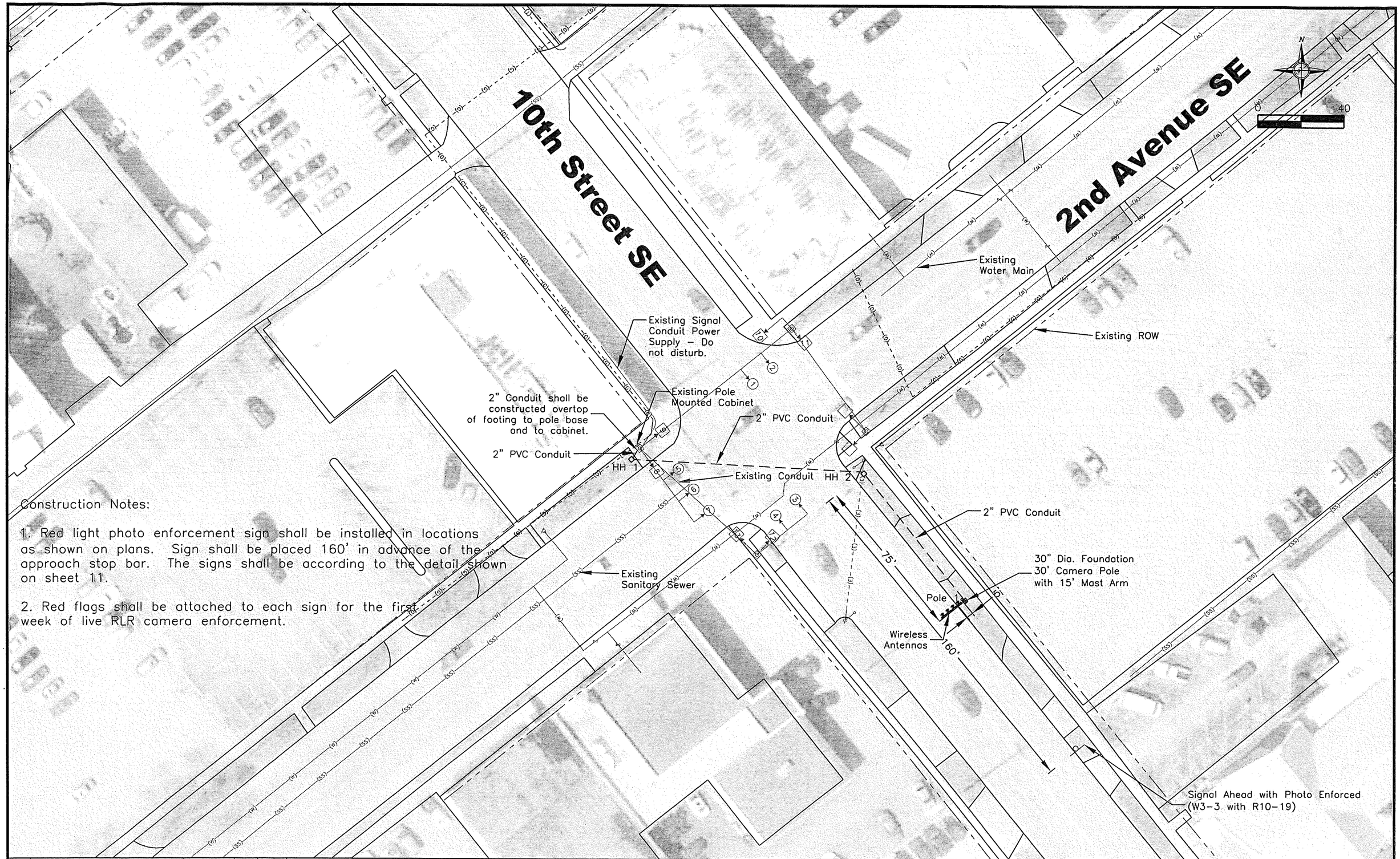

Construction Notes:

1. Red light photo enforcement sign shall be installed in locations as shown on plans. Sign shall be placed 160' in advance of the approach stop bar. The signs shall be according to the detail shown on sheet 11.

2. Red flags shall be attached to each sign for the first week of live RLR camera enforcement.

NO.	REVISION DESCRIPTION	APPROVED	DATE

Client: GATSO USA
8341 E. EVANS ROAD, SUITE 104
SCOTTSDALE, AZ 85260

Project #60-10-023

ANDERSON-BOGERT
Engineers & Surveyors, Inc.

Drawn By: TPM
Date: 11/2009
Project No. 209125
Approved By: JCM

Intersection Safety Camera Installation

10th St SE & 2nd Ave SE
Proposed Layout

SHEET NO. 7 OF 11

T:\ACAD\209125\dwg\Sheets\2nd_10th.dwg 12-07-09 10:38:27 AM tpm281

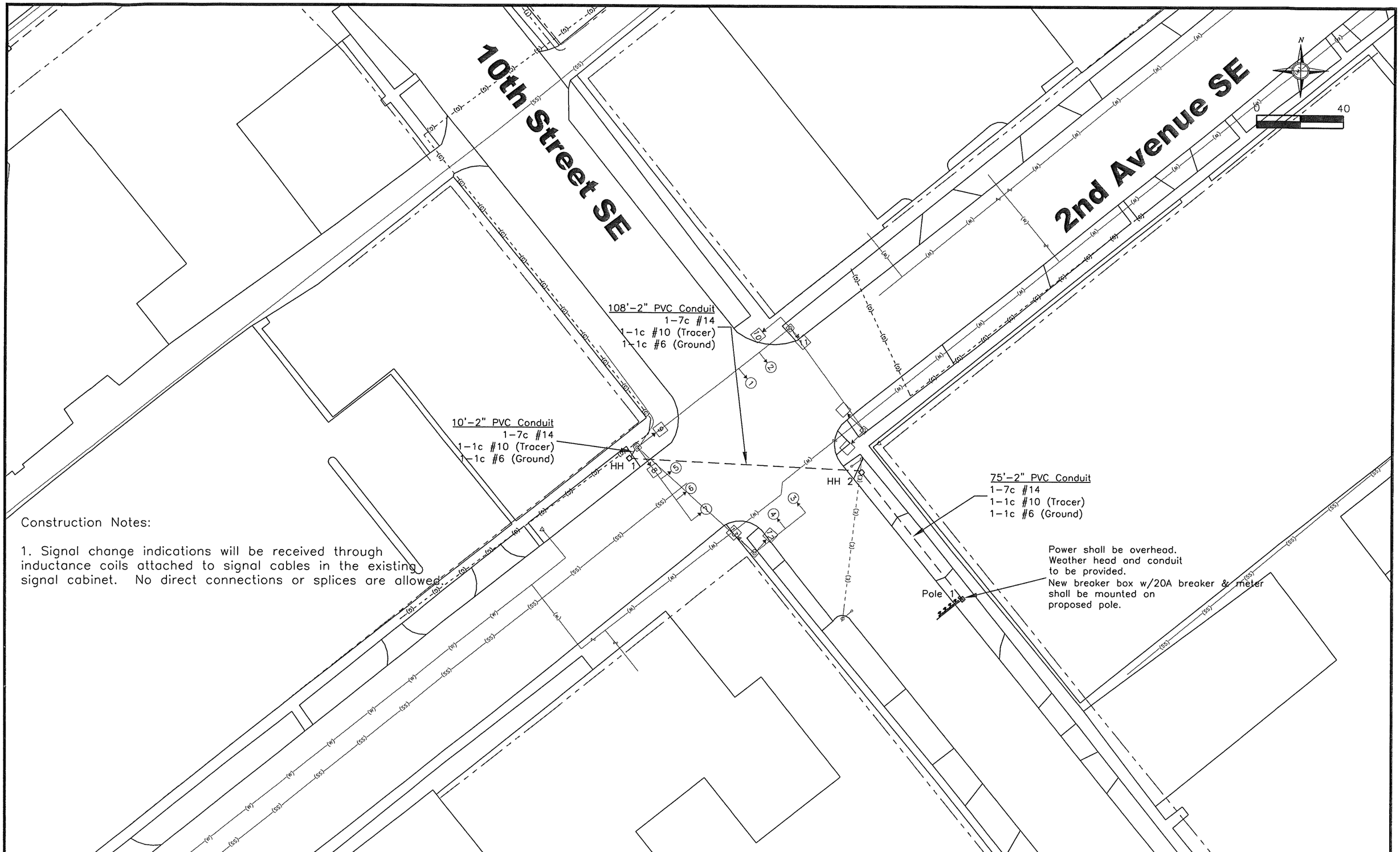

Construction Notes:

1. Signal change indications will be received through inductance coils attached to signal cables in the existing signal cabinet. No direct connections or splices are allowed.

NO.	REVISION DESCRIPTION	APPROVED	DATE

Client: GATSO USA
8341 E. EVANS ROAD, SUITE 104
SCOTTSDALE, AZ 85260

Project #60-10-023

ANDERSON-BOGERT
Engineers & Surveyors, Inc.

Drawn By: TPM
Date: 11/2009
Project No. 209125
Approved By: JCM

Intersection Safety Camera Installation

10th St SE & 2nd Ave SE
Wiring Diagram

SHEET NO. 8 OF 11

T:\ACAD\209125\dwg\Sheets\2nd_10th.dwg 12-07-09 10:39:16 AM tpm281

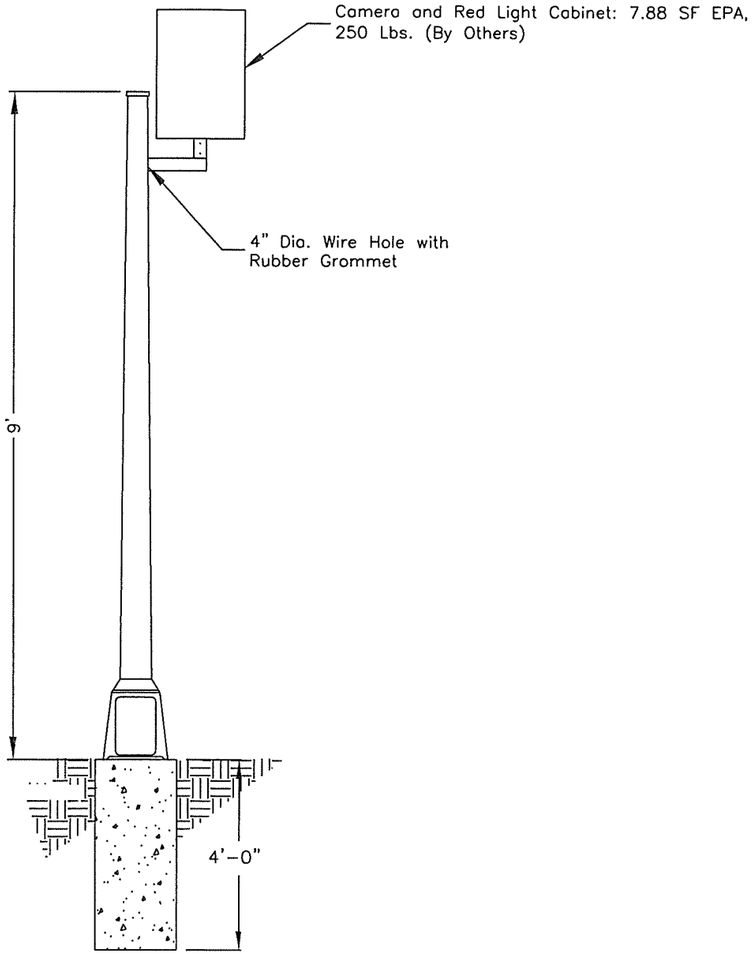

9' Pole

All other notes and dimensions same as 30' Camera Pole

Notes:
1) Shaft And Arm Shall Be Heat Treated To -T6 Temper After Welding.
2) Poles Designed To Meet 2001 AASHTO Specification For A 130 mph (Excluding Section 11) Wind Velocity When Supporting Four 5"W x 20"L x 2"D Fixed Antennas With Equal Spacing Across Mast Arm, One Camera Cabinet 35"H x 27"L x 16"W Mounted At 10'-0", And One Flash Cabinet 7.3"H x 13.8"L x 8.7"W Mounted At 15'-0".
3) Pole Dia. @ 10'-0": 10" O.D., Pole Dia. @ 20'-0": 7.48" O.D.

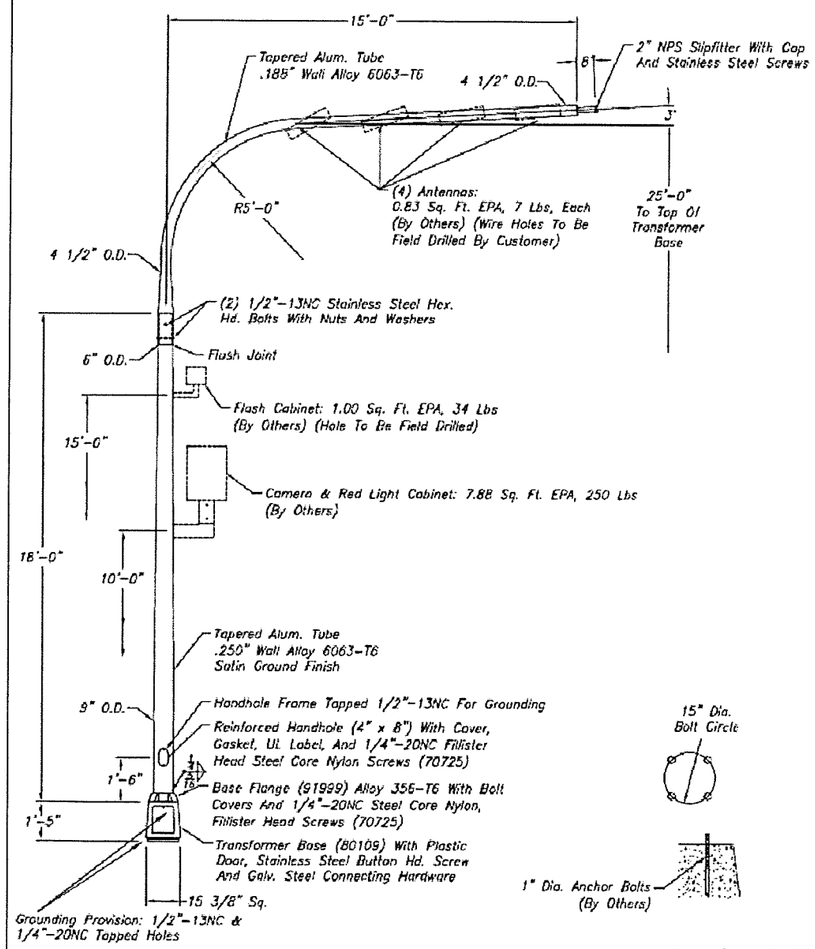

B17113

Ref: 15707/SKTB061909A

NO.	REVISIONS	DATE

hapco

TITLE 30'-0" CAMERA POLE	
CUSTOMER ILLINOIS DOT	
SCALE 32	DATE 06/19/2009
BY TNB	DWG. NO. B17113
CHK'D	

NO.	REVISION DESCRIPTION	APPROVED	DATE

Client: GATSO USA
8341 E. EVANS ROAD, SUITE 104
SCOTTSDALE, AZ 85260

Project #60-10-023

ANDERSON-BOGERT
Engineers & Surveyors, Inc.

Drawn By: TPM
Date: 11/2009
Project No. 209125

Approved By: JCM

Intersection Safety Camera Installation

Camera Pole Details

SHEET NO. 9 OF 11

T:\ACAD\209125\dwg\Sheets\9_10Details.dwg 12-07-09 10:45:01 AM tpm281

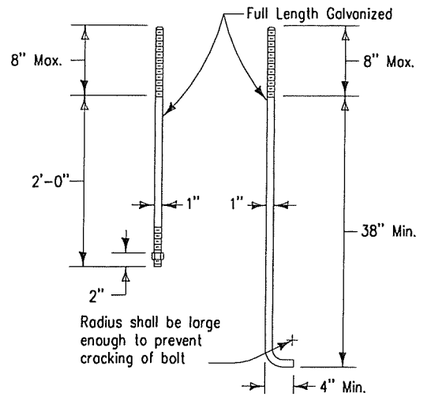

ANCHOR BOLT DETAILS

HARDWARE CLASSIFICATION				
Bolt Size	Bolt Grade	Nuts (Heavy Hex)	Washers	Galvanizing
1" x Various Full Length Galvanized	ASTM F-1554 Grade 105 Class 2A	ASTM A-563-DH Class 2B	ASTM F-436	ASTM A-153 Class C

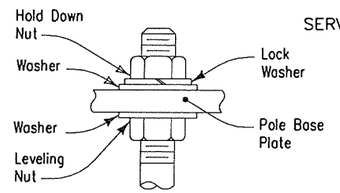

DETAIL 'A'

Without Transformer Base

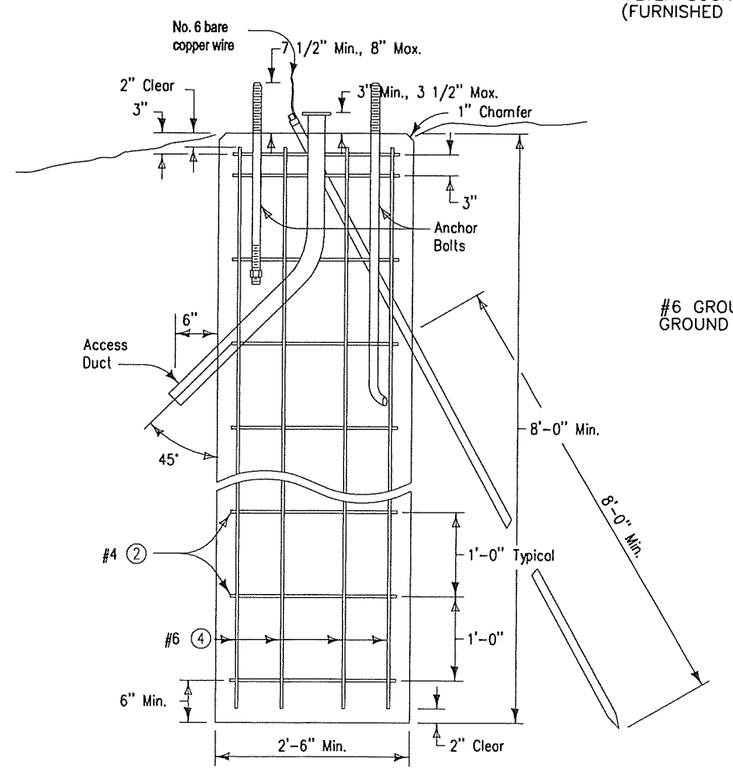

FOOTING

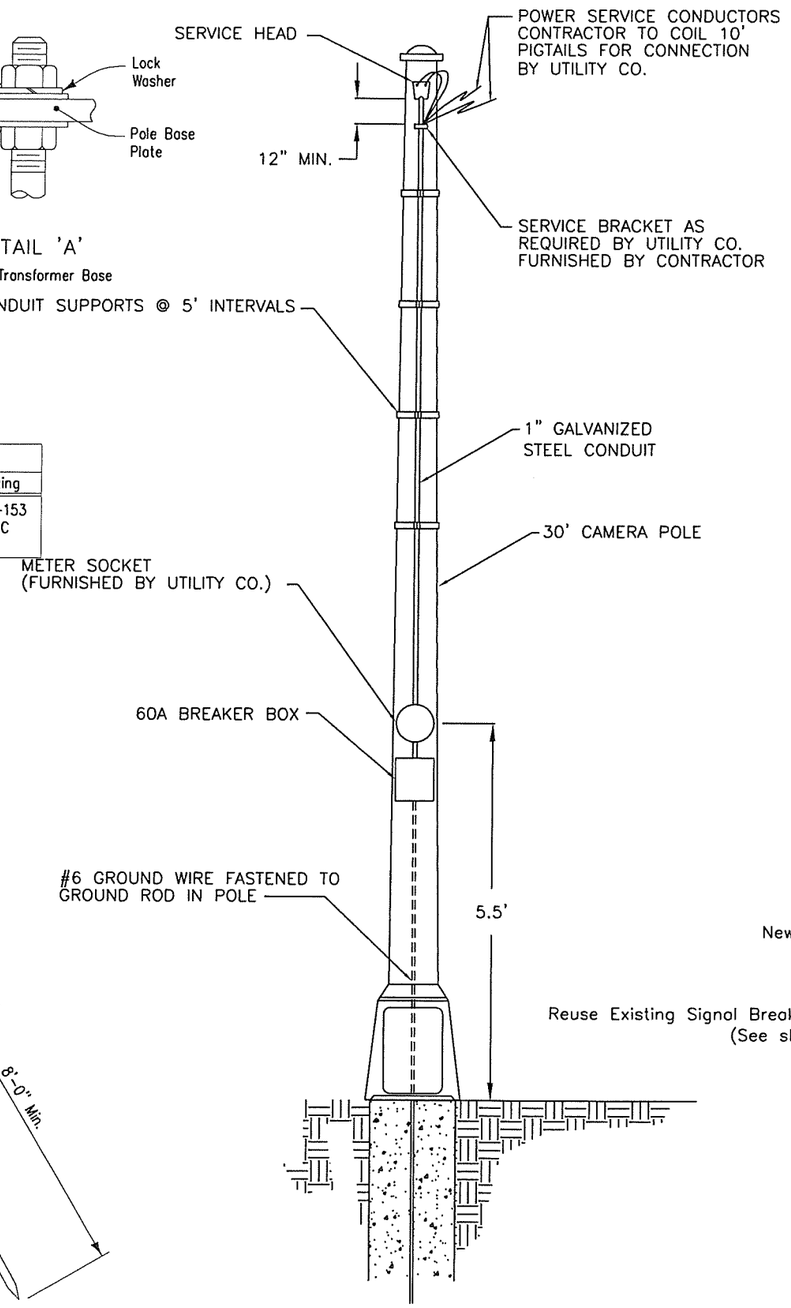

Power Service Detail

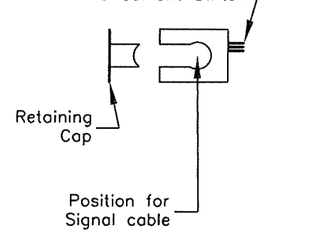

Signal Cabinet

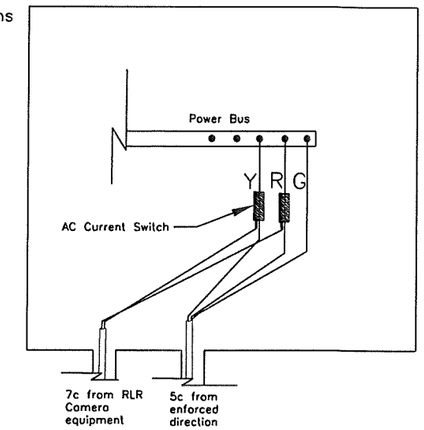

All AC current switches shall be neatly tied and mounted on a panel provided by the Contractor at the back of the cabinet.

Existing Electric Meter

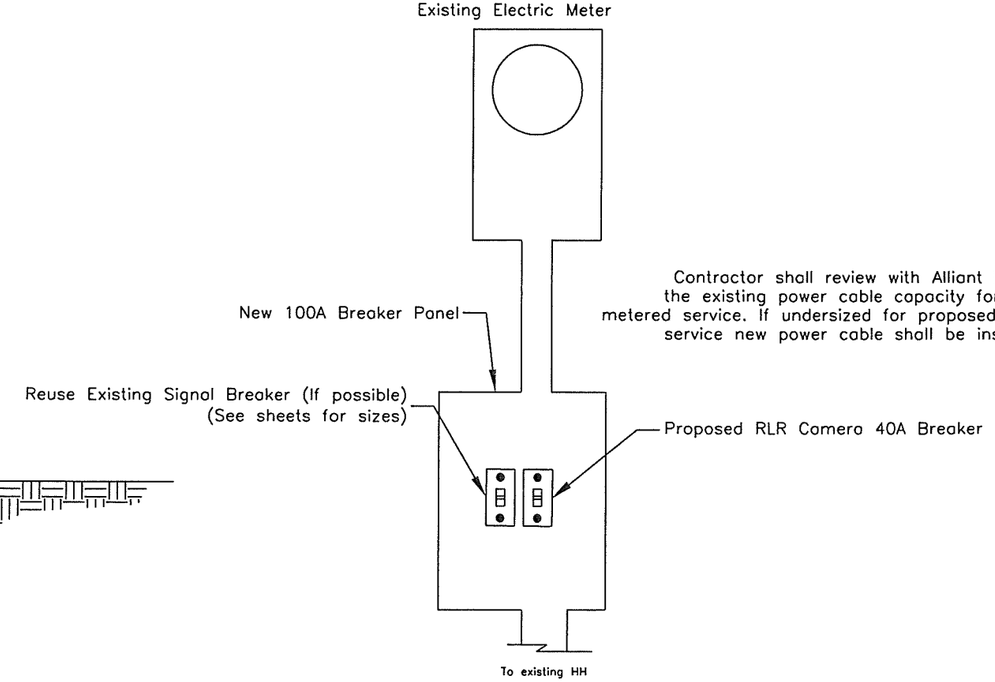

Contractor shall review with Alliant Energy the existing power cable capacity for each metered service. If undersized for proposed 100A service new power cable shall be installed.

NO.	REVISION DESCRIPTION	APPROVED	DATE

Client: GATSO USA
8341 E. EVANS ROAD, SUITE 104
SCOTTSDALE, AZ 85260

Project #60-10-023

ANDERSON-BOGERT
Engineers & Surveyors, Inc.

Drawn By: TPM
Approved By: JCM
Date: 11/2009
Project No. 209125

Intersection Safety Camera Installation

Concrete Foundation & Power Service Detail

SHEET NO. 10 OF 11

T:\ACAD\209125\dwg\Sheets\9_10Details.dwg 12-07-09 10:48:54 AM tpm281

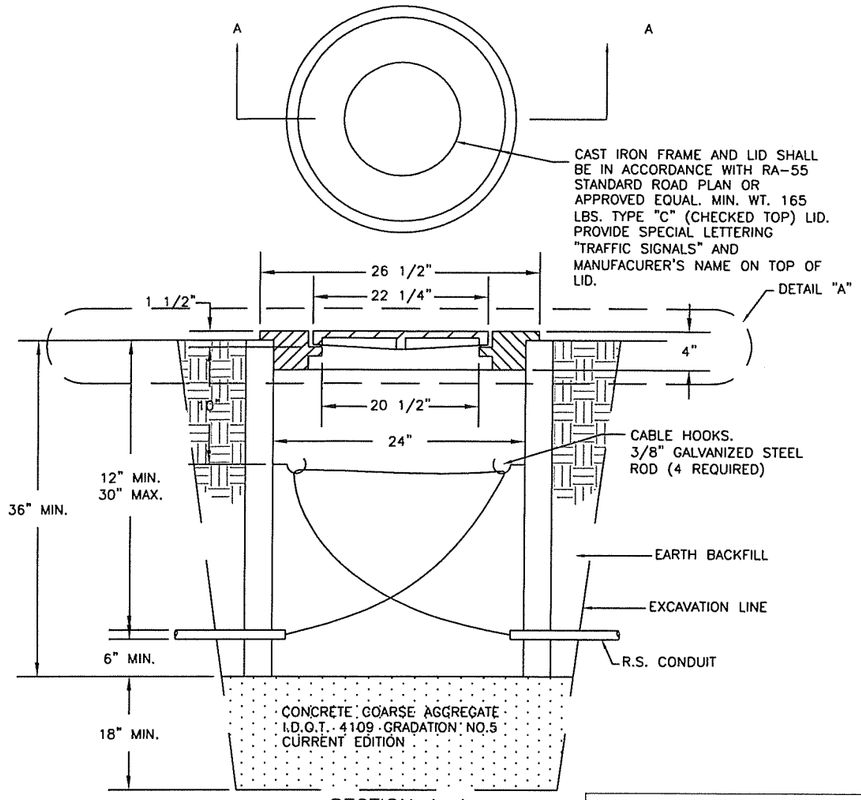

SECTION A-A
LEVEL GROUND INSTALLATION

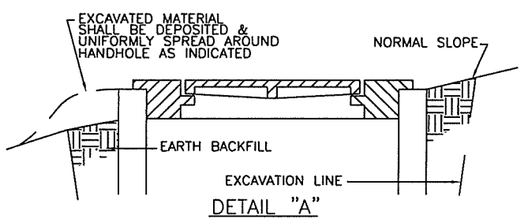

DETAIL "A"
SLOPING GROUND INSTALLATION

GENERAL NOTES:

1. DETAILS HEREON ARE FOR A PRECAST HANDHOLE FOR INSTALLATION OF ELECTRICAL WIRING AND CONDUIT. LOCATION AND OTHER DETAILS WILL BE SHOWN ON PROJECT PLANS.

2. BACKFILL SHALL BE PLACED IN ACCORDANCE WITH REQUIREMENTS FOR BACKFILLING OF CONDUIT TRENCH.

3. CONDUIT ACCESS SHALL BE GROUTED WITH MORTAR AFTER NECESSARY CONDUITS ARE INSTALLED.

4. CABLE HOOKS MAY BE PRECAST WITH HANDHOLE OR MAY BE INSTALLED AS NECESSARY BY A METHOD APPROVED BY THE ENGINEER. CABLE HOOKS SHALL BE HOT DIPPED GALVANIZED IN ACCORDANCE WITH ASTM A 153.

5. BODY OF HANDHOLE SHALL COMPLY WITH THE REQUIREMENTS OF IDOT STANDARD ROAD PLAN RF-1 FOR CLASS 2000D CONCRETE PIPE INSOFAR AT APPLICABLE.

6. WHEN PRECAST HANDHOLE IS PLACED IN SIDEWALK OR PAVEMENT, THE FRAME SHALL BE INVERTED FROM THE ORIENTATION SHOWN ON THIS DETAIL. THE TOP OF THE FRAME SHALL BE FLUSH WITH THE SIDEWALK OR PAVEMENT ELEVATION.

7. ACCESS CONDUIT SHALL BE THE SAME AS REQUIRED FOR THE CIRCUIT DUCTS UNLESS OTHERWISE SPECIFIED.

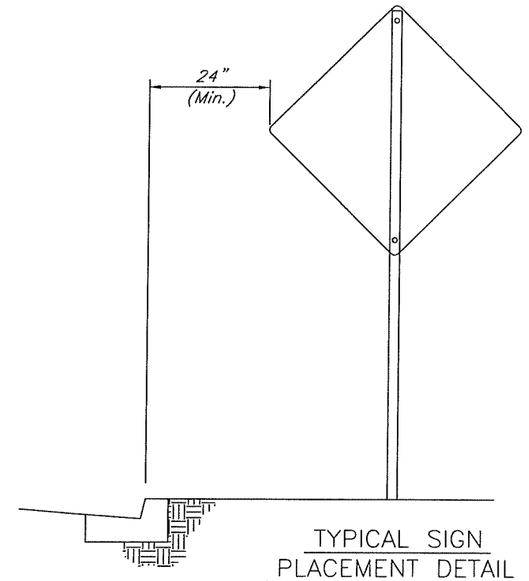

TYPICAL SIGN PLACEMENT DETAIL

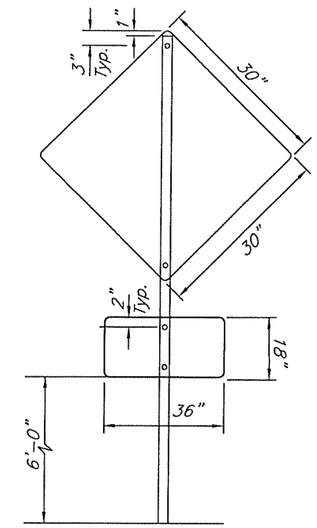

W3-3 w/ R10-19

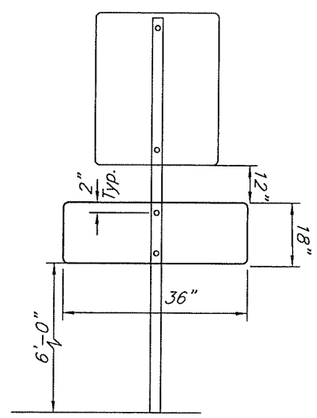

Existing R2-1
w/ Proposed R10-18

Notes:
1st Avenue approoches must have R10-18 signs added to the existing R2-1 in advance of the intersection. Signs shall be supplied but installed by the DOT.

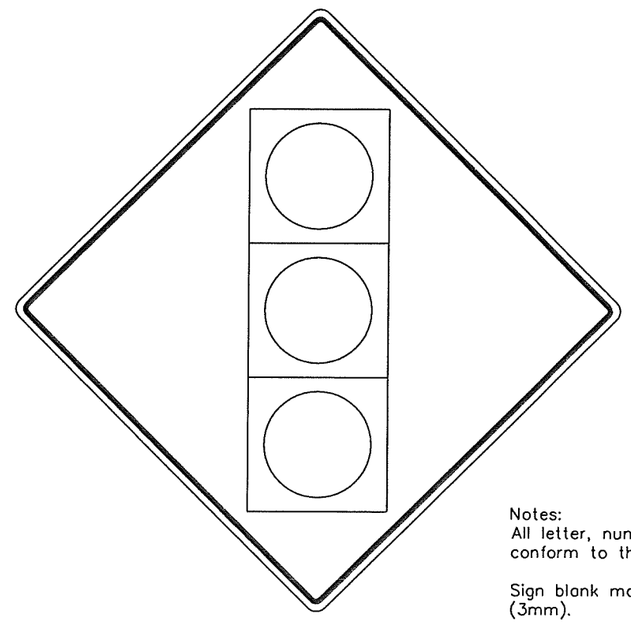

Signal Ahead
W3-3
(30"x30")

PHOTO ENFORCED

Photo Enforced
R10-19
(24"x18")

TRAFFIC LAWS PHOTO ENFORCED

Photo Enforced
R10-18
(36"x18")

Notes:
All letter, number, & symbol sizes, spacing & colors, and the sign colors shall conform to the current "Manual On Uniform Traffic Control Devices."

Sign blank material shall be sheet aluminum thickness of 0.125 inches (3mm).

Reflective sheeting shall be Type I (Engineering Grade).

Sign posts shall be 2" x 2" square galvanized steel.

All posts & hardware shall be galvanized steel meeting 4186 of the IDOT Standard Specifications for Highway and Bridge Construction (Series 2009).

NO.	REVISION DESCRIPTION	APPROVED	DATE

Client: GATSO USA
8341 E. EVANS ROAD, SUITE 104
SCOTTSDALE, AZ 85260

Project #60-10-023

ANDERSON-BOGERT
Engineers & Surveyors, Inc.

Drawn By: TPM
Date: 11/2009
Project No. 209125
Approved By: JCM

Intersection Safety Camera Installation

Handhole and Sign Details

SHEET NO. 11 OF 11

T:\ACAD\209125\dwg\Sheets\9_10Details.dwg 12-08-09 09:21:15 AM tpm281