PROJECT No.	SHEET No.
1080	1 Of 20

CITY OF NEW ORLEANS

DEPARTMENT OF PUBLIC WORKS
RED LIGHT PHOTO SAFETY PROGRAM

SHEET INDEX

SHEET NO.	SITE ID	DESCRIPTION
1		TITLE SHEET
2-3	N010	NB ST CHARLES AVE AT MARTIN LUTHER KING JR BLVD - PLAN
	N011	SB ST CHARLES AVE AT MARTIN LUTHER KING JR BLVD - PLAN
		ST CHARLES AVE AT MARTIN LUTHER KING JR BLVD - WIRE SCHEMATIC
4-5	N012	EB POYDRAS ST AT CONVENTION CENTER BLVD - PLAN
	N013	WB POYDRAS ST AT CONVENTION CENTER BLVD - PLAN
		POYDRAS ST AT CONVENTION CENTER BLVD - WIRE SCHEMATIC
6-7	N014	EB POYDRAS ST AT CARONDELENT ST & ST CHARLES AVE - PLAN
	N019	POYDRAS ST AT CARONDELENT ST & ST CHARLES AVE - WIRE SCHEMATIC
8-9	N015	EB ST CHARLES AVE AT WASHINGTON AVE - PLAN
		ST CHARLES AVE AT WASHINGTON AVE - WIRE SCHEMATIC
10-11	N016	EB ST CHARLES AVE AT LOUISIANA AVE - PLAN
	N017	WB ST CHARLES AVE AT LOUISIANA AVE - PLAN
		ST CHARLES AVE AT LOUISIANA AVE - WIRE SCHEMATIC
12-13	N018	WB POYDRAS ST AT MAGAZINE ST - PLAN
		POYDRAS ST AT MAGAZINE ST - WIRE SCHEMATIC
14-20		ATS STANDARD DETAILS

VICINITY MAP
N.T.S.

PLANS PREPARED & RECOMENDED FOR APPROVAL BY:

ATS _____ DATE _____

RECOMMENDED BY:

TRAFFIC ENGINEER, DEPARTMENT OF PUBLIC WORKS _____ DATE _____

(*) APPROVED BY:

DIRECTOR _____ DATE _____

SCHEDULE OF REVISIONS

DATE	REVISION	BY	DATE	REVISION	BY

TYPE OF CONSTRUCTION:

INSTALL EQUIPMENT FOR RED LIGHT PHOTO SAFETY PROGRAM.

TRAFFIC DATA

					1999 ADT	2019 ADT

NOTES:

THE DEPARTMENT OF PUBLIC WORKS, CITY OF NEW ORLEANS GENERAL SPECIFICATIONS FOR STREET PAVING, LATEST EDITION, SHALL GOVERN ON THIS PROJECT EXCEPT AS AMENDED BY SPECIAL PROVISION AND /OR SUPPLEMENTAL SPECIFICATIONS.

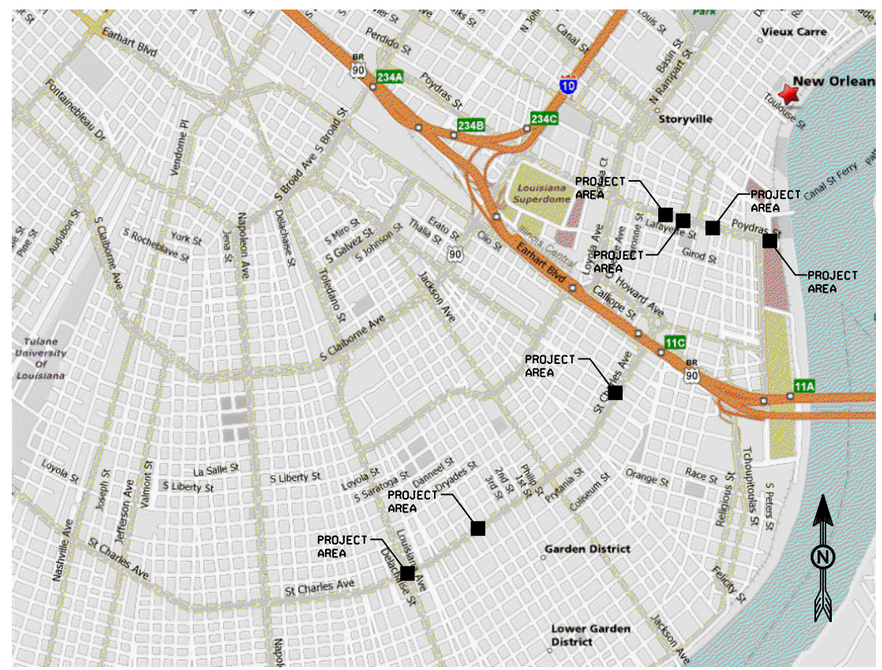
PROJECT AREA
PROJECT AREA
PROJECT AREA
PROJECT AREA
PROJECT AREA
PROJECT AREA
Vieux Carre
New Orlean
Storyville
Louisiana Superdome
Garden District
Lower Garden District
Tulane University of Louisiana
Earhart Blvd
Poydras St
Canal St
St Charles Ave
Loyola St
Jackson Ave
Magazine St
Tchoupitoulas St
Peters St
Decatur St
Chartres St
Bourbon St
Bienville St
Iberville St
Toulouse St
Girod St
Howard Ave
Calliope St
Clio St
Erato St
Thalia St
Perdido St
Gravier St
Julia St
Poydras St
Canal St
Canal St Ferry
Louisiana Ave
Delachaise St
Napoleon Ave
Jefferson Ave
Nashville Ave
Fontainebleau Dr
Vendome Pl
S Broad Ave
S Claiborne Ave
Audubon St
Palm St
S Rocheblave St
York St
Jena St
S Miro St
S Galvez St
S Johnson St
Toledano St
S Liberty St
La Salle St
Valmont St
Joseph St
Saratoga St
Dante St
Orleans St
Philip St
Prytania St
Coliseum St
Orange St
Race St
Religious St
Felicity St
Jackson Ave
N Rampart St
Basin St
Louis St
Bienville St
Iberville St
Toulouse St
Canal St
Poydras

SINGHA THAI CAFE
413 CARONDELET ST
NEW ORLEANS, LA 70130
504-581-2205

DRURY INN & SUITES
820 POYDRAS ST
NEW ORLEANS, LA 70112
504-529-7800

INTERCONTINENTAL NEW ORLEANS
444 ST. CHARLES AVE
NEW ORLEANS, LA 70130
504-581-6182

ST CHARLES AVE

POYDRAS ST.

CARONDELET ST.

STOP BAR

95'

PIEZO-LOOP-PIEZO
SEE DETAIL "B" ON
SHEET 18 OF 20.

MASTER CONTROLLER
CABINET REAR SCENE CAMERA.
AXSIS LIVE CAMERA, AND 300 W
FLASH MOUNTED ON POLE 1.
SEE DETAIL "B" ON SHEET 15 OF 20.

4'

PHOTO ENFORCEMENT SIGN
SEE DETAIL "B" ON
SHEET 19 OF 20.

NEW METER POLE.
SEE DETAIL "A" ON
SHEET 19 OF 20.

TERMINATE AT TRAFFIC
CONTROLLER FOR RED &
AMBER PHASE AND POWER.
SEE DETAIL "B" ON SHEET
14 OF 20.

TERMINATE AT TRAFFIC
CONTROLLER FOR RED &
AMBER PHASE AND POWER.
SEE DETAIL "B" ON SHEET
14 OF 20.

TELCO DROP
LOCATION

PHOTO ENFORCEMENT SIGN
SEE DETAIL "B" ON
SHEET 19 OF 20.

75'

STOP BAR

4'

PIEZO-LOOP-PIEZO
SEE DETAIL "C" ON
SHEET 17 OF 20.

CONTROLLER CABINET REAR
SCENE CAMERA. AXSIS LIVE
CAMERA, AND 300 W FLASH
MOUNTED ON POLE 3. SEE
DETAIL "B" ON SHEET 15 OF 20.

N

LEGEND	
	CONDUIT
	DIRECTIONAL BORE
	REAR MONITOR CAMERA ON ATS POLE
	PIEZO LOOP PIEZO
	STUB OUT WINDOW
	PULL/ JUNCTION BOX
	PHOTO ENFORCEMENT SIGN
	EXISTING CONDUIT

PRIOR TO COMMUNICATIONS
CONDUIT RUN CONSTRUCTION,
CONTRACTOR TO CONFIRM
EXACT DSL D-MARC LOCATION
THAT IS TO BE PROVIDED BY ATS
INSTALLATION COORDINATOR/
CONSTRUCTION MANAGER.

Dottie says, Dig Safely. 1.800.272.3020

ATS American Traffic Solutions

14861 N. SCOTTSDALE ROAD, SUITE 109
SCOTTSDALE, ARIZONA 85254 USA
TEL: (480) 368-0900 FAX: (480) 607-0901

NEW ORLEANS

REDLIGHT PHOTO ENFORCEMENT PROGRAM

INTERSECTION PLAN OF:
POYDRAS ST AT CARONELET ST & ST.CHARLES AVE

DRAWN BY: AA	DATE: 4-11-08	SCALE: 1:20	JOB NO.: 1080	SHEET NO.: 6 OF 20
DESIGNED BY: AA				
ENGINEER: RBZ				

LEGEND

———	CONDUIT
- - - -	DIRECTIONAL BORE
	REAR MONITOR CAMERA ON ATS POLE
	PIEZO LOOP PIEZO
	STUB OUT WINDOW
	PULL/ JUNCTION BOX
	PHOTO ENFORCEMENT SIGN
— — — —	EXISTING CONDUIT

CONDUIT & CONDUCTOR SCHEDULE

CONDUIT						CONDUCTORS															
FROM	TO	CENTER TO CENTER DISTANCE	1½"	3"	REMARKS	FROM	TO	CENTER TO CENTER DISTANCE	POWER					CONTROL					DETECTOR			REMARKS
									3/c #4	3/c #10	3/c #14	3/c #16	2/c #18	CAT5e	7/c #14	8281 COAX	IMSA 60-2	2/c #22 SYNC	IMSA 51-7 1/c #14 LOOP	IMSA 50-2 2/c #14 LEAD-IN	1/c #18 PIEZO	
1	2	18'	28'			1		5'	1-15'						1-15'							
2	⊠	6'		16'		1	2	18'	1-28'						1-28'							
2	2	7'		17'		2	⊠	6'											4-16'		8-16'	
2	3	73'		83'		2	2	7'	1-17'	1-17'												
3	1	6'		16'		2	3	73'		2-83'					1-83'					4-83'	8-83'	
3	4	105'		115'		3	1	6'		2-16'					1-16'		3-16'			4-16'	8-16'	
4	1	51'	61'			3	4	105'		1-115'							3-115'					
4	3	84'		94'		4	1	51'									1-61'					
3	5	56'		66'		4	3	84'		1-94'							2-94'					
5	⊠	15'	25'			3	5	56'							1-66'					3-66'	6-66'	
5	6	15'		25'		5	⊠	15'											3-25'		6-25'	
						5	6	15'							1-25'							
						6		15'							1-25'							
						1	CONT.	20'		1-20'	2-20'		1-20'	1-20'	1-20'	1-20'	3-20'	1-20'		4-20'	8-20'	CONDUCTORS IN POLE TO CONTROLLER.
						3	CONT.	20'		1-20'	2-20'		1-20'	1-20'	1-20'	1-20'	2-20'	1-20'		3-20'	6-20'	
TOTALS			114'	432'		TOTALS			60'	464'	80'		40'	40'	298'	40'	742'	40'	139'	734'	1746'	

CONT = NEW ATS CONTROLLER

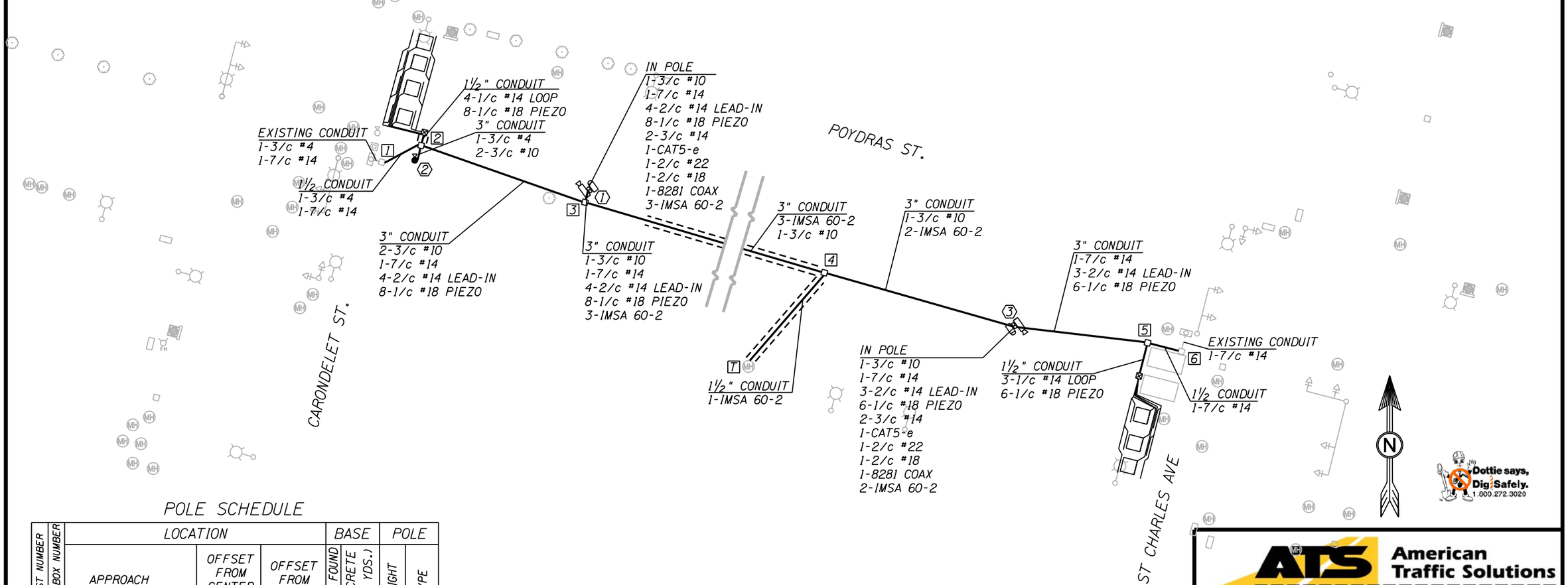

POLE SCHEDULE

POST NUMBER	PULL BOX NUMBER	LOCATION			BASE		POLE	
		APPROACH	OFFSET FROM CENTER S/B	OFFSET FROM F/C	# OF FOUND	CONCRETE (CU. YDS.)	HEIGHT	TYPE
1		WB POYDRAS ST	95'	4'	1	0.58	20'	ALUM
2		EB POYDRAS ST	75'	4'	1	0.58	20'	ALUM
2		WB POYDRAS ST	21'	11'	1	0.58	21'	ALUM
				TOTAL		1.74'		

WIRE SCHEMATIC

PRIOR TO COMMUNICATIONS CONDUIT RUN CONSTRUCTION, CONTRACTOR TO CONFIRM EXACT DSL D-MARC LOCATION THAT IS TO BE PROVIDED BY ATS INSTALLATION COORDINATOR/ CONSTRUCTION MANAGER.

American Traffic Solutions
14861 N. SCOTTSDALE ROAD, SUITE 109
SCOTTSDALE, ARIZONA 85254 USA
TEL: (480) 368-0900 FAX: (480) 607-0901

NEW ORLEANS

REDLIGHT PHOTO ENFORCEMENT PROGRAM

INTERSECTION PLAN OF:
POYDRAS ST AT CARONELET ST & ST.CHARLES AVE

DRAWN BY:	AA				
DESIGNED BY:	AA				
ENGINEER:	RBZ	DATE: 4-11-08	SCALE: 1:20	JOB NO.: 1080	SHEET NO.: 7 OF 20

GENERAL & CONSTRUCTION NOTES

1. SEPARATE RIGHT-OF-WAY PERMITS ARE REQUIRED FOR WORK WITHIN PUBLIC AGENCY RIGHT-OF-WAY. CONTRACTOR SHALL BE RESPONSIBLE FOR SUBMITTING APPLICATION PERMITS & FEE'S, AND COMPLY WITH ALL PUBLIC AGENCY REQUIREMENTS.
2. UTILITY LOCATIONS SHOWN ON PLANS ARE APPROXIMATE BASED ON AVAILABLE INFORMATION. CONTRACTOR SHALL BE RESPONSIBLE TO CONTACT DESIGNATED AGENCY TO LOCATE ALL UNDERGROUND UTILITIES 48 HOURS PRIOR TO COMMENCEMENT OF CONSTRUCTION.
3. CONTRACTOR SHALL BE RESPONSIBLE TO APPLY AND OBTAIN AN APPROVED TRAFFIC CONTROL PLAN IN ACCORDANCE WITH MUTCD AND LOCAL STANDARDS AS REQUIRED.
4. CONTRACTOR SHALL BE RESPONSIBLE TO RESTORE ALL DISTURBED AREAS TO ORIGINAL CONDITION TO AGENCY SATISFACTION AT NO ADDITIONAL COMPENSATION.
5. INSTALL INLINE 20 AMP FUSE INSIDE HAND HOLE ON ATS CAMERA POLES.
6. INSTALL FOUNDATION POLE AND GROUNDING WIRE FOR ATS EQUIPMENT. SEE LOCATIONS IN DRAWINGS AND SEE POLE FOUNDATION DETAIL.
7. INSTALL PULL/ JUNCTION BOX OF THE REQUIRED SIZE AND TYPE PER LOCAL AGENCY STANDARDS.
8. HDP ROLL PIPE TO BE BORED UNDER ROADWAY - 36" COVER MINIMUM. SEE SIZES AND LOCATION IN DRAWINGS.
9. CONTRACTOR SHALL CALL THE CITY TRAFFIC SIGNAL SUPERVISOR AT LEAST 72 HOURS IN ADVANCE TO COORDINATE THE POWER DROP INTO THE AGENCIES METER PEDESTAL.
10. THE CONTRACTOR SHALL HAVE A LEVEL II IMSA CERTIFIED TECHNICIAN/ ELECTRICIAN ON-SITE AT ALL TIMES DURING CONSTRUCTION. CONDUCTOR SPLICES AND TERMINATIONS SHALL BE MADE BY A QUALIFIED JOURNEYMAN ELECTRICIAN, WHO HAS SUCCESSFULLY COMPLETED A RECOGNIZED FOUR (4) YEAR APPRENTICESHIP PROGRAM OR EQUIVALENT TRAINING, OR BY A PERSON ENROLLED IN A RECOGNIZED FOUR (4) YEAR APPRENTICESHIP PROGRAM UNDER THE DIRECT SUPERVISION OF A JOURNEYMAN ELECTRICIAN.
11. TERMINATE RED & AMBER PHASE WIRES TO AGENCIES RED & AMBER PHASE CONDUCTORS IN THE NEAREST JUNCTION BOX OR INSIDE SIGNAL CONTROLLER BOX. SEE CONDUCTOR RED & AMBER PHASE CONNECTION DETAIL. CONTRACTOR SHALL CONTACT THE CITY TRAFFIC SIGNAL SUPERVISOR AND CITY POLICE DEPARTMENT FOR ON-SITE ASSISTANCE AS NEEDED WITH RED & AMBER PHASE AND ISOLATION CONNECTION. ALLOW 24 HOURS ADVANCE NOTICE BEFORE CONNECTION.
12. CONTRACTOR SHALL PLACE SIGNAL PHOTO ENFORCEMENT SIGNS AT A MINIMUM DISTANCE OF 300' FEET BUT NOT TO EXCEED 500' FEET FROM THE STOP BAR ON EVERY MONITORED APPROACH. PHOTO ENFORCEMENT SIGNS SHALL NOT BLOCK VIEW OF ANY REGULATORY, GUIDE OR WARNING SIGNS.
13. ALL WORK SHALL CONFORM TO ALL APPLICABLE ELECTRICAL CODES EXCEPT WHEN CITY STANDARDS SUPERSEDE.
14. CONTRACTOR SHALL TRIM EXISTING TREES TO IMPROVE LINE OF SIGHT AS NEEDED. CONTRACTOR SHALL NOTIFY THE AGENCIES AND OBTAIN APPROVAL PRIOR TO TRIMMING.
15. AT LOCATIONS WHERE EXISTING ENFORCEMENT EQUIPMENT MAY EXIST, CONTRACTOR SHALL COORDINATE WITH THE OWNER AND ATS PROJECT MANAGER FOR REMOVAL & SALVAGE.
16. CONTRACTOR SHALL COORDINATE WITH THE CITY TRAFFIC SIGNAL SUPERVISOR AND LAW ENFORCEMENT TO HAVE AN OFFICER PRESENT WHEN TRAFFIC SIGNAL POWER IS TURNED OFF FOR CONNECTION TO POWER PEDESTAL.
17. CONNECT POLE TO SOLID BARE BOND GROUND & GROUNDING ROD (OR COIL 25' OF NO. 6 BARE COPPER) IN POLE FOUNDATION & TO SYSTEM GROUND BONDED BACK TO ATS CABINET.
18. CONTRACTOR SHALL PLACE THE POLES/ FOUNDATIONS IN A LOCATION TO MAINTAIN A 5' CLEAR SPACE FROM THE OVERHEAD POWER LINES.
19. CONTRACTOR TO LABEL EACH END OF ALL CABLE RUNS.

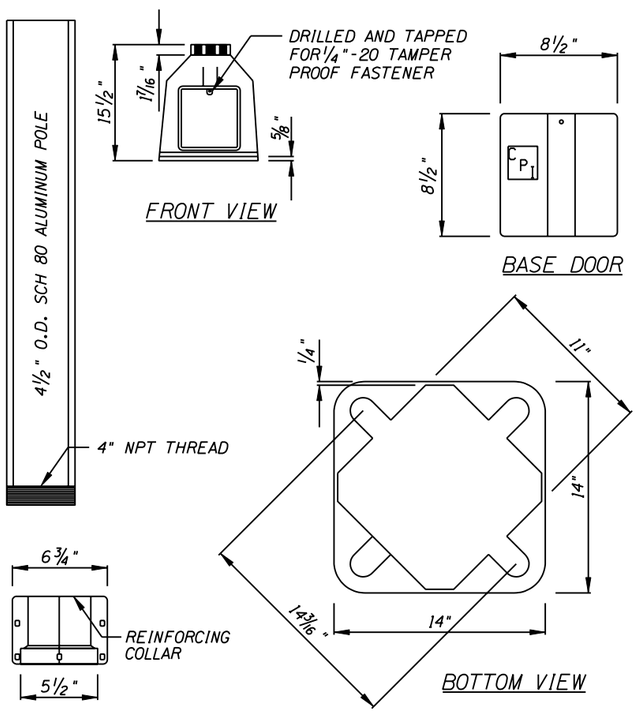

DETAIL "A"

ALUMINUM BASE & POLE DETAIL

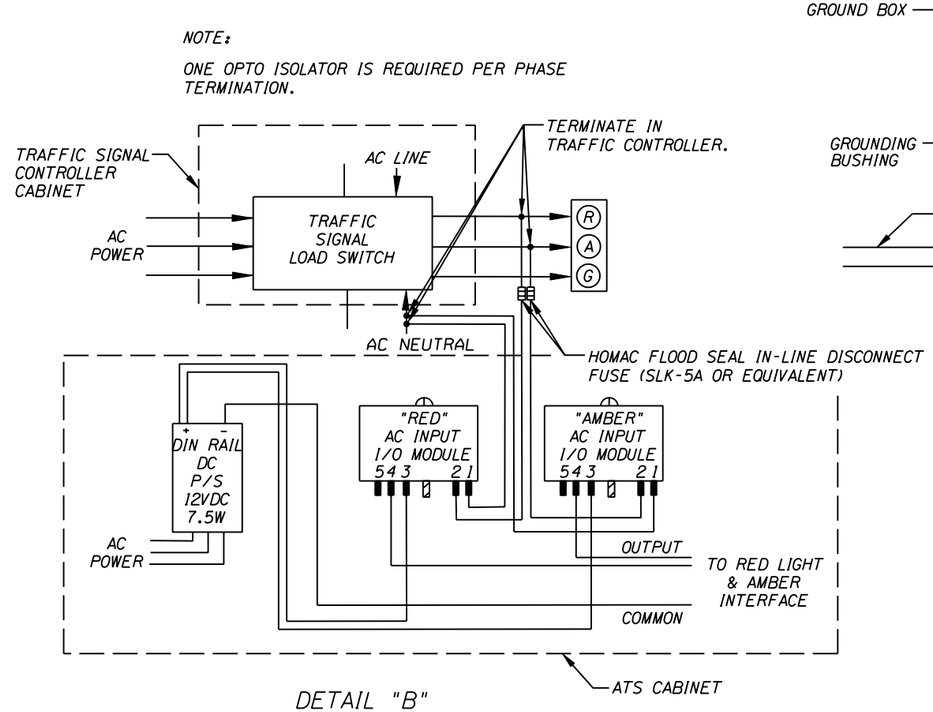

DETAIL "B"

RED AND AMBER PHASE CONNECTION DETAIL

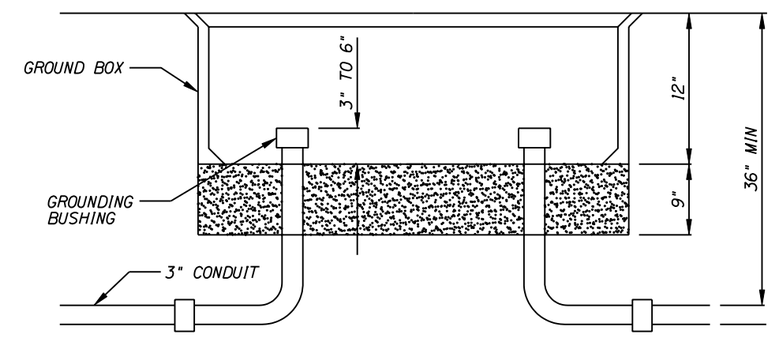

DETAIL "C"

TYPICAL GROUND BOX DETAIL

American Traffic Solutions

14861 N. SCOTTSDALE ROAD, SUITE 109
SCOTTSDALE, ARIZONA 85254 USA
TEL: (480) 368-0900 FAX: (480) 607-0901

NEW ORLEANS

REDLIGHT PHOTO ENFORCEMENT PROGRAM

INTERSECTION PLAN OF:
ATS STANDARD DETAILS

DRAWN BY: AA	DATE: 4-11-08	SCALE: NTS	JOB NO.: 1080	SHEET NO.: 14 OF 20
DESIGNED BY: AA				
ENGINEER: RBZ				

NOTES:

1. ALL EXPOSED FOUNDATION FACES SHALL BE FINISHED SMOOTH.
2. FINISHED FOUNDATION ELEVATION SHALL BE AT SAME GRADE AS SIDEWALK.
3. ANCHOR BOLTS SHALL MEET ASTM A-36 AND SHALL BE GALVANIZED.
4. NO WELDING PERMITTED ON REINFORMENT CAGE.
5. CONDUIT COVER SHALL MEET LOCAL STANDARDS.
6. 1" CHAMFER IS REQUIRED WHEN FOUNDATION IS NOT ADJACENT TO CONCRETE SIDEWALK.
7. DUCT SEAL AROUND 2" PIPE BETWEEN POLE AND CABINET FOR MOISTURE PREVENTIONS.

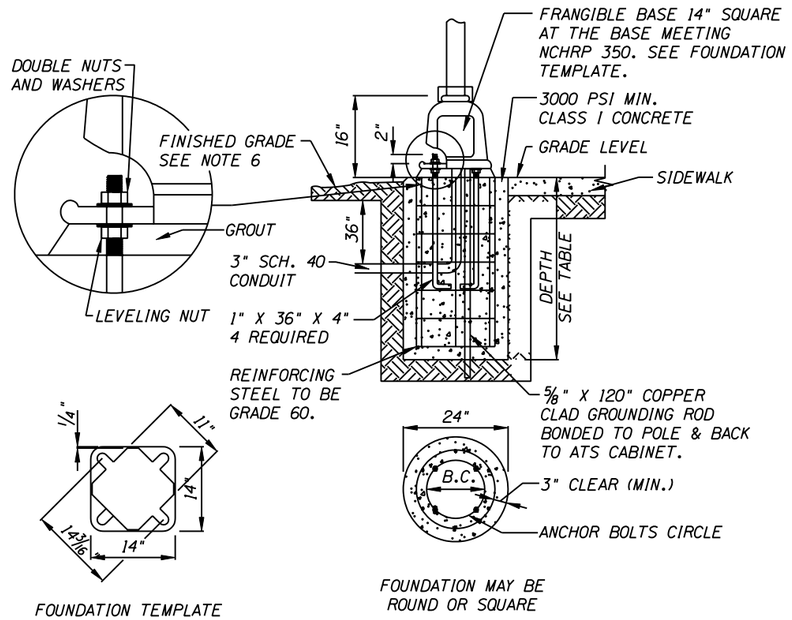

POLE HEIGHT	DIAMETER	DEPTH	BOLT CIRCLE (B.C.)	FOUNDATION REINFORCEMENT	
				VERTICAL	HORIZONTAL
10'	2'-0"	3'-0"	14 3/16"	6-NO. 8	NO. 3 @ 12" C-C
15'	2'-0"	4'-0"	14 3/16"	6-NO. 8	NO. 3 @ 12" C-C
20'	2'-0"	5'-0"	14 3/16"	6-NO. 8	NO. 3 @ 12" C-C
30'	2'-0"	6'-0"	14 3/16"	6-NO. 8	NO. 3 @ 12" C-C

DETAIL "A"

FOUNDATION DETAIL

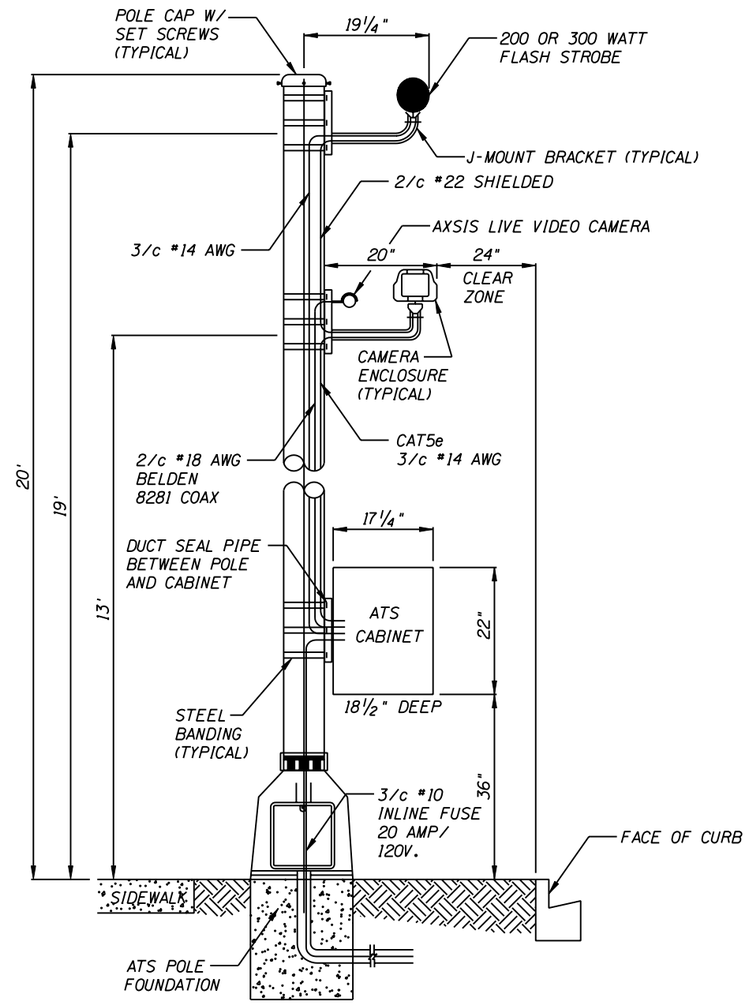

DETAIL "B"

REAR SCENE CAMERA
20' ALUMINUM POLE

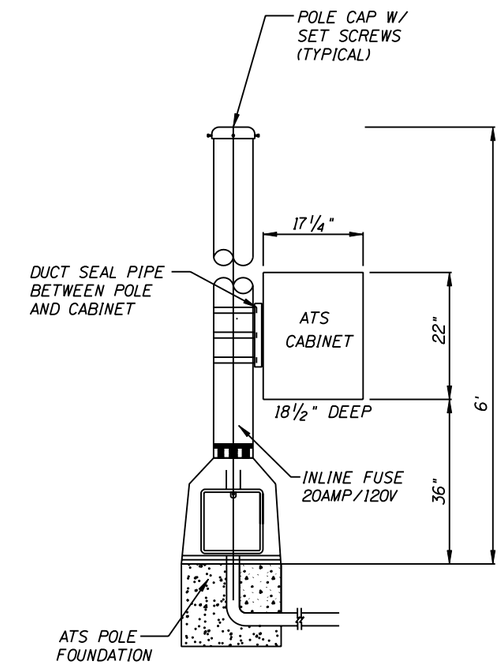

DETAIL "C"

ATS POLE
WITH CABINET

American Traffic Solutions

14861 N. SCOTTSDALE ROAD, SUITE 109
SCOTTSDALE, ARIZONA 85254 USA
TEL: (480) 368-0900 FAX: (480) 607-0901

NEW ORLEANS

REDLIGHT PHOTO ENFORCEMENT PROGRAM

INTERSECTION PLAN OF:
ATS STANDARD DETAILS

DRAWN BY: AA
DESIGNED BY: AA
ENGINEER: RBZ
DATE: 4-11-08
SCALE: NTS
JOB NO.: 1080
SHEET NO.: 15 OF 20

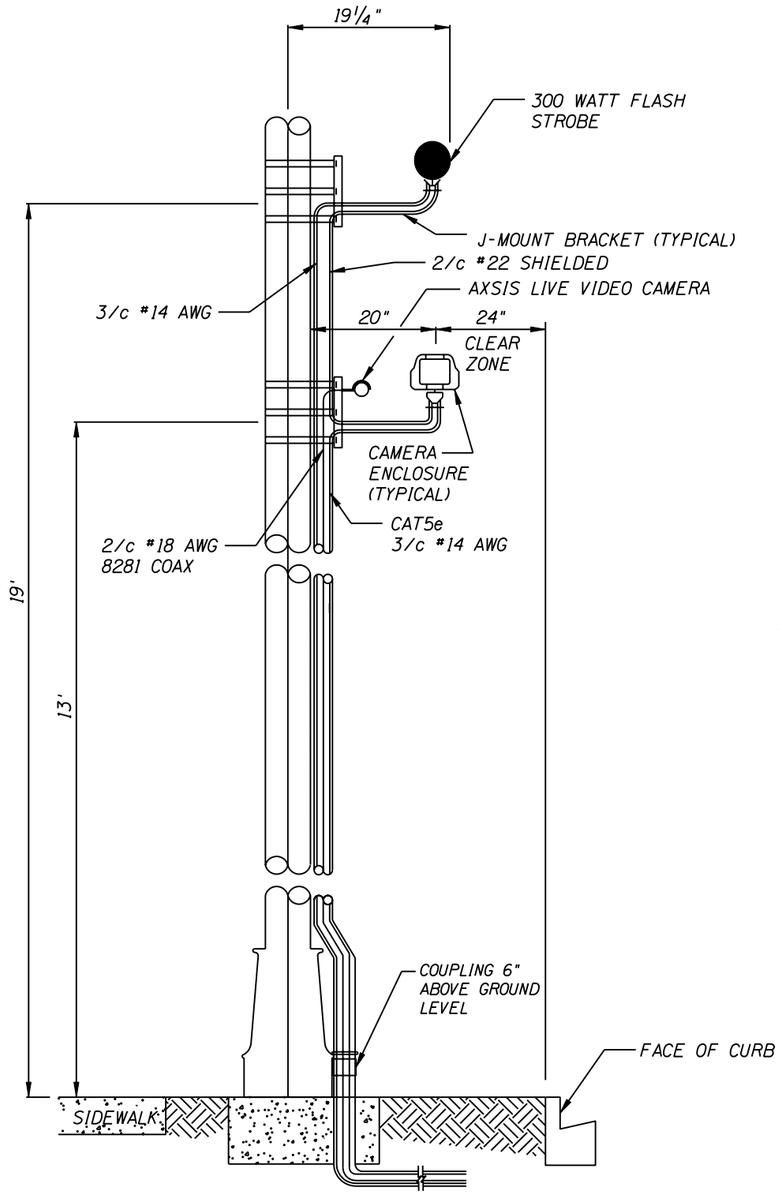

DETAIL "A"

REAR SCENE CAMERA ON EXISTING POLE

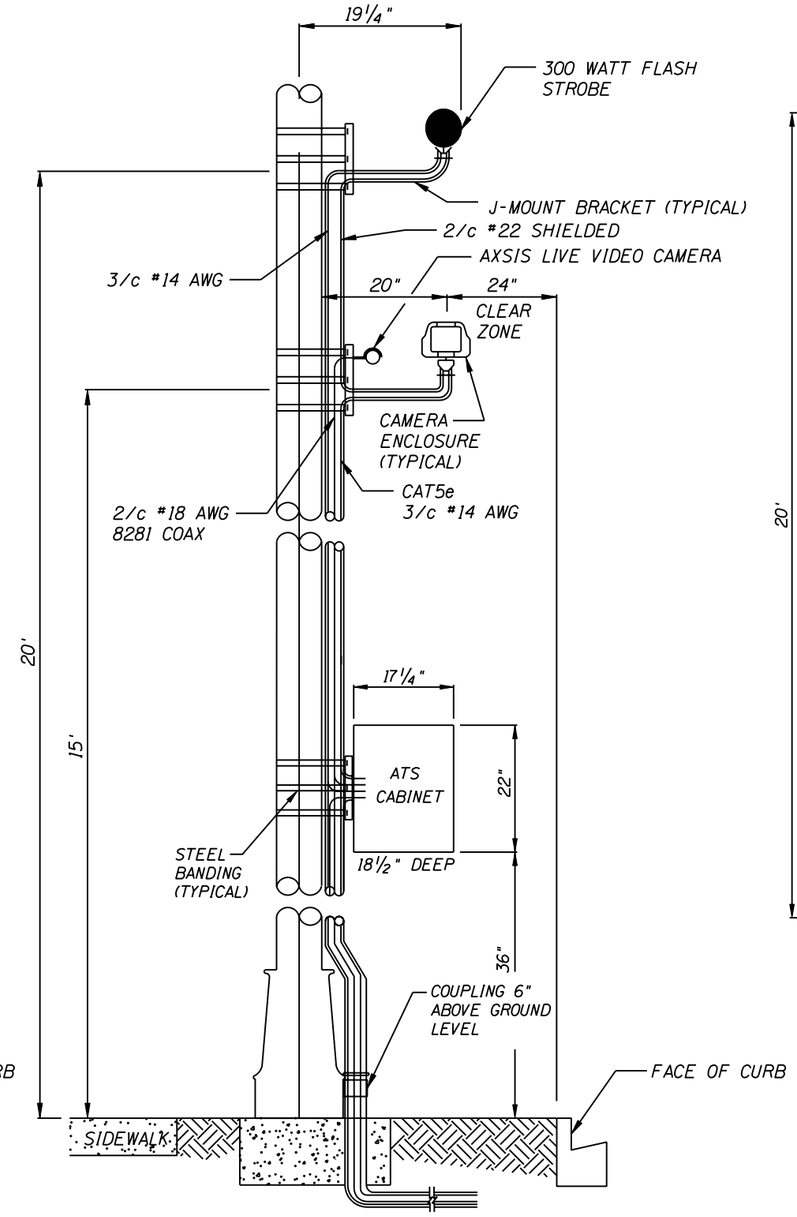

DETAIL "B"

REAR SCENE CAMERA ON EXISTING POLE

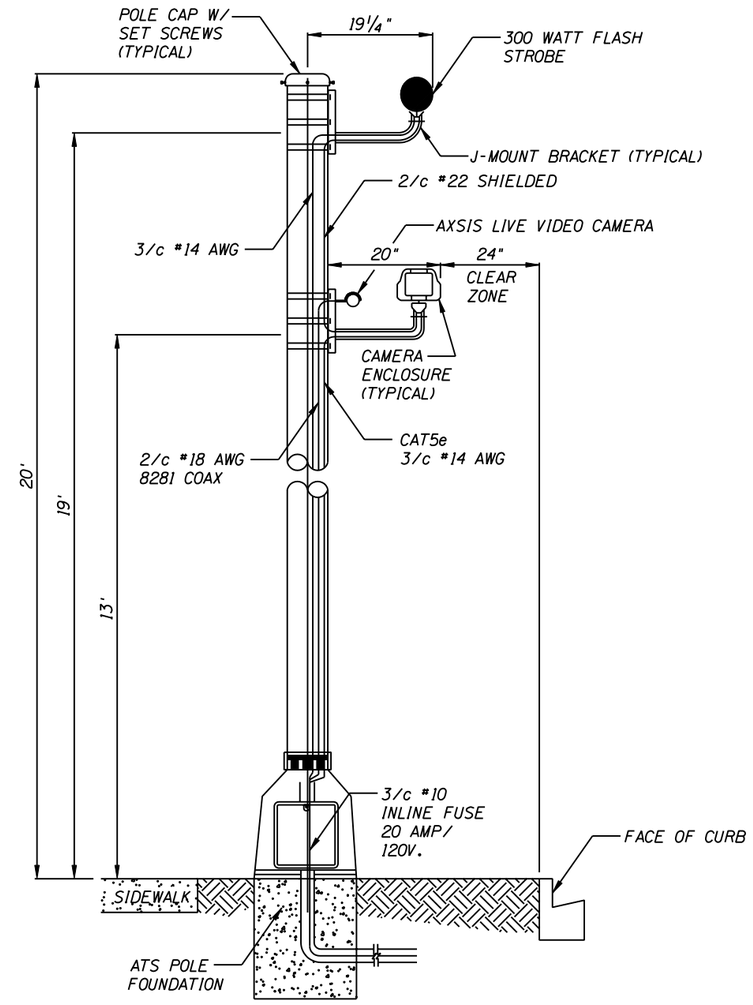

DETAIL "C"

REAR SCENE CAMERA POLE WITHOUT CABINET

American Traffic Solutions

14861 N. SCOTTSDALE ROAD, SUITE 109
SCOTTSDALE, ARIZONA 85254 USA
TEL: (480) 368-0900 FAX: (480) 607-0901

NEW ORLEANS

REDLIGHT PHOTO ENFORCEMENT PROGRAM

INTERSECTION PLAN OF:
ATS STANDARD DETAILS

DRAWN BY: AA	DATE: 4-11-08	SCALE: NTS	JOB NO.: 1080	SHEET NO.: 16 OF 20
DESIGNED BY: AA				
ENGINEER: RBZ				

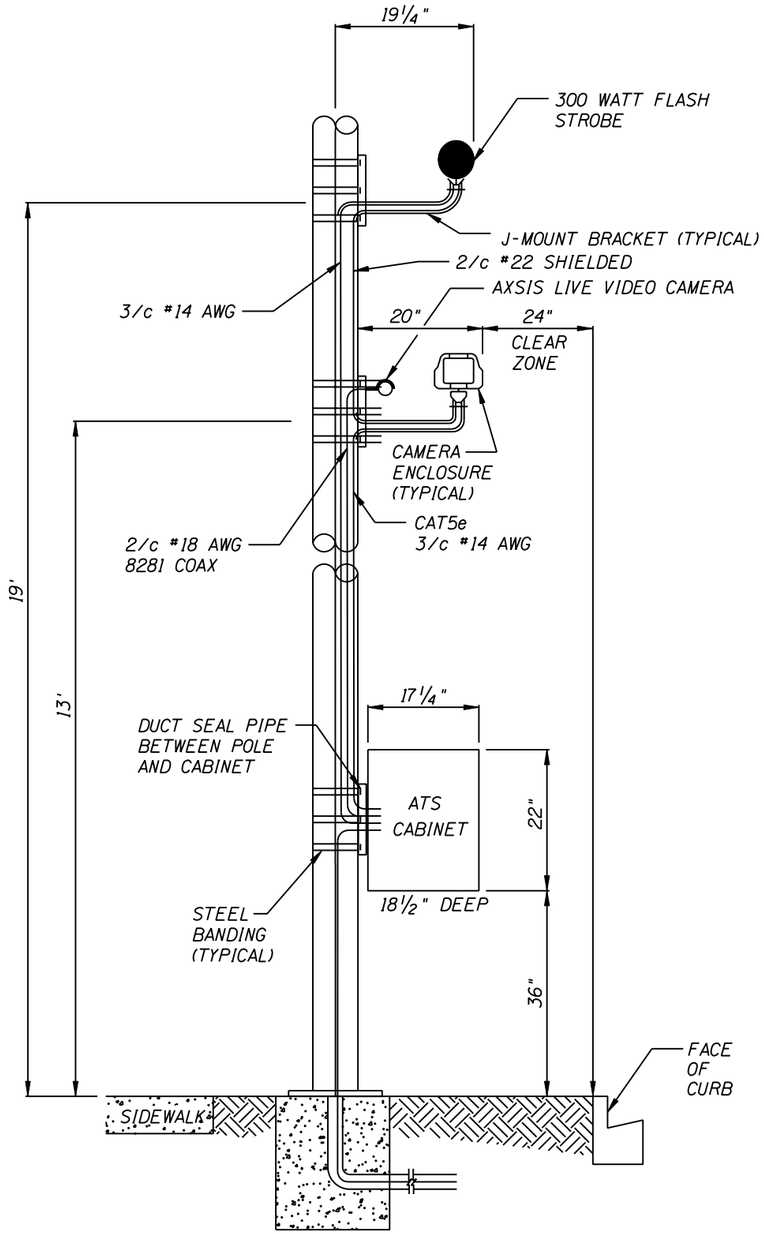

DETAIL "A"

REAR SCENE CAMERA ON EXISTING METAL POLE

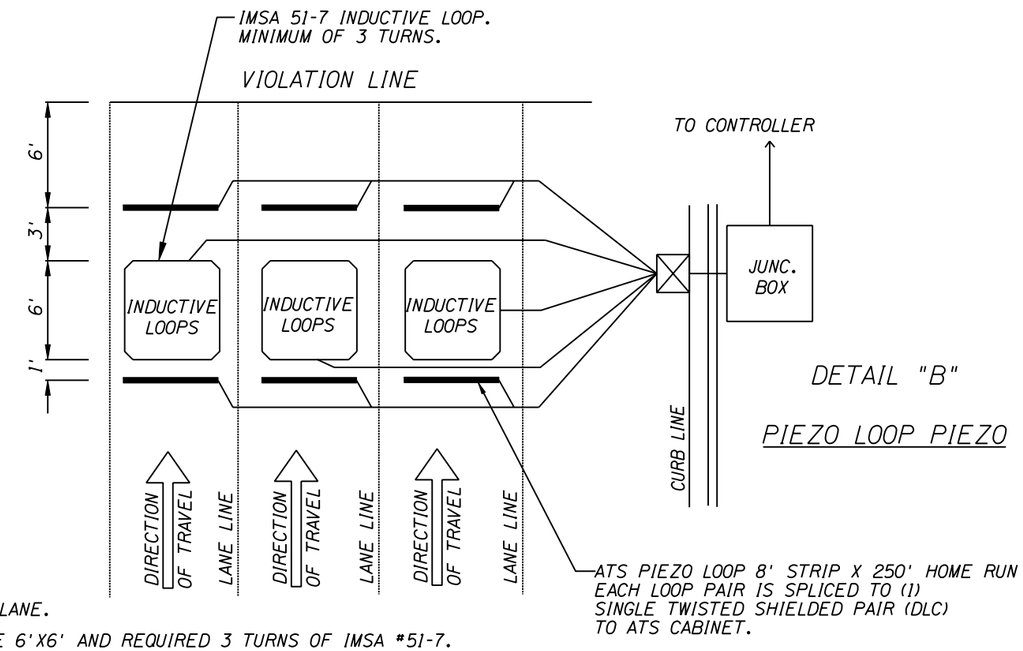

DETAIL "B"

PIEZO LOOP PIEZO

NOTES:

1. CENTER SENSORS IN LANE.
2. INDUCTIVE LOOPS ARE 6'X6' AND REQUIRED 3 TURNS OF IMSA #51-7.
3. LOOP HOMERUNS ARE TWISTED EVERY 1" AND RUN IN INDIVIDUAL SAW CUTS TO THE PULL BOX, THEN SPLICE WITH 3M 78-R SERIES AWG SHIELDED CABLES BACK TO CONTROL CABINET.
4. PIEZO HOMERUNS CAN SHARE THE SAME CUT.
5. PIEZOS AND PIEZO SEALANT (A5 475) ARE PROVIDED BY ATS.
6. LOOP DLC IMSA 50-2, 14 AWG 2 CONDUCTOR WITH BARE DRAIN WIRE.

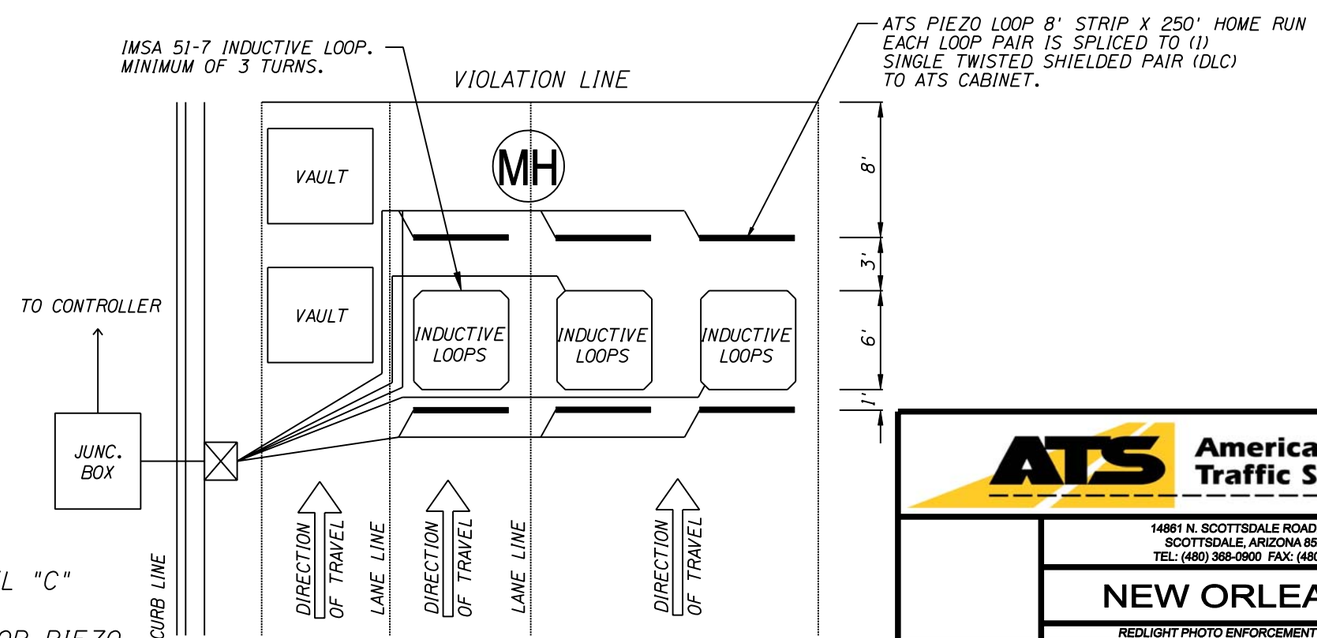

DETAIL "C"

PIEZO LOOP PIEZO

American Traffic Solutions
14861 N. SCOTTSDALE ROAD, SUITE 109
SCOTTSDALE, ARIZONA 85254 USA
TEL: (480) 368-0900 FAX: (480) 607-0901

NEW ORLEANS

REDLIGHT PHOTO ENFORCEMENT PROGRAM

INTERSECTION PLAN OF:
ATS STANDARD DETAILS

DRAWN BY: AA	DATE: 4-11-08	SCALE: NTS	JOB NO.: 1080	SHEET NO.: 17 OF 20
DESIGNED BY: AA				
ENGINEER: RBZ				

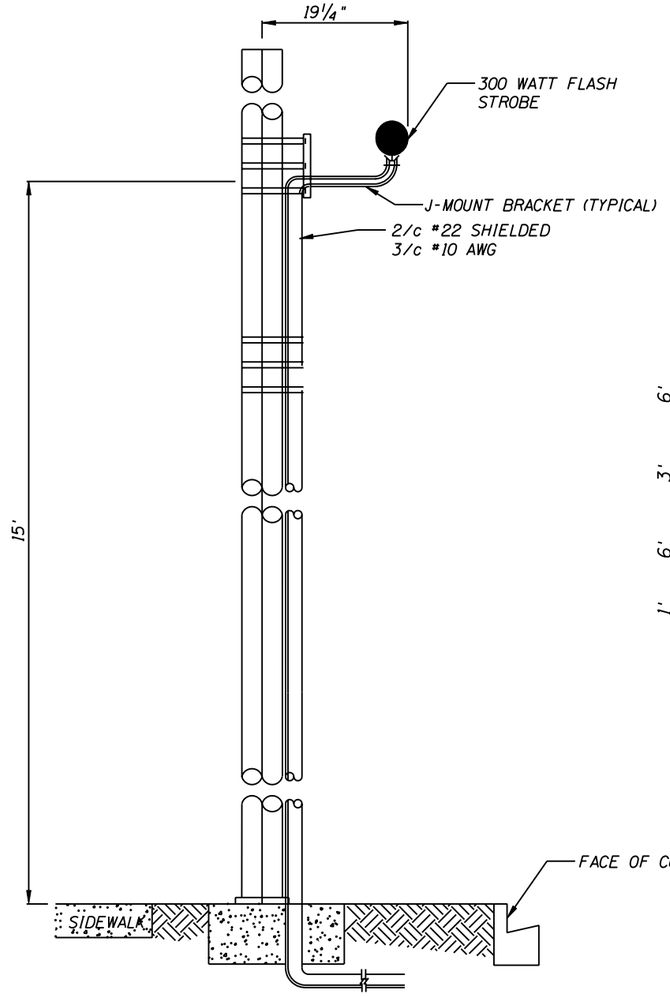

DETAIL "A"

AUXILIARY FLASH ON EXISTING POLE

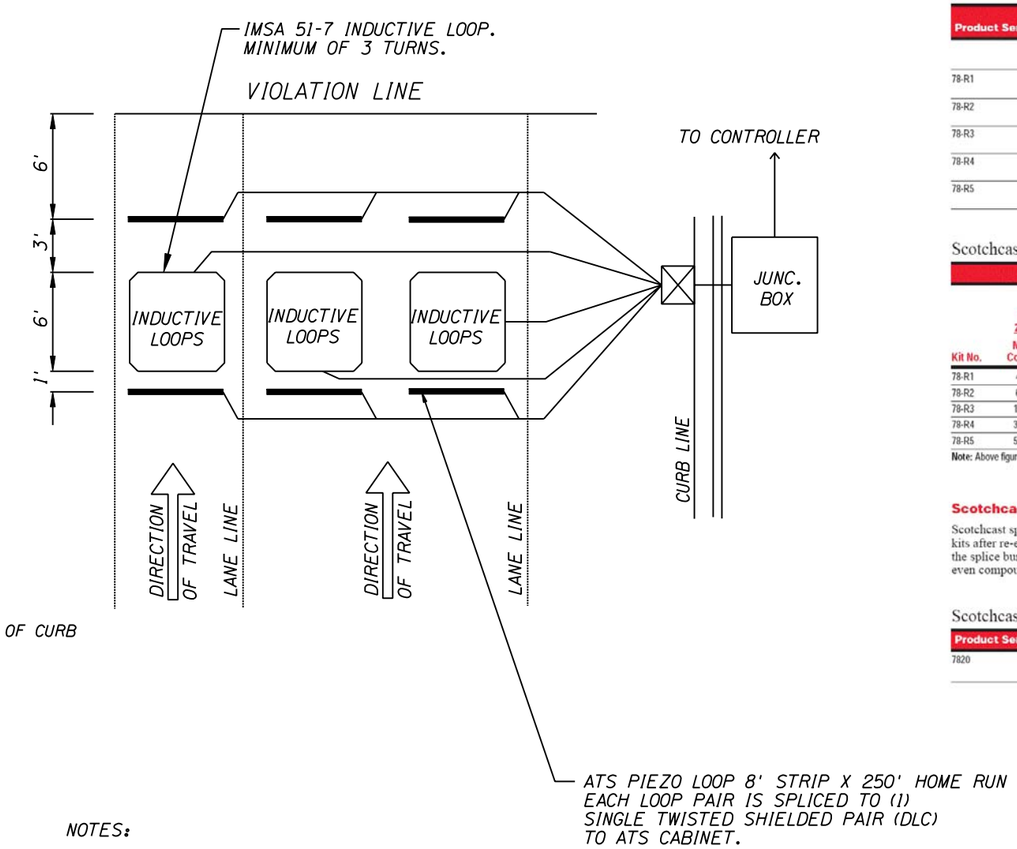

NOTES:

1. CENTER SENSORS IN LANE.
2. INDUCTIVE LOOPS ARE 6'X6' AND REQUIRED 3 TURNS OF IMSA #51-7.
3. LOOP HOMERUNS ARE TWISTED EVERY 1" AND RUN IN INDIVIDUAL SAW CUTS TO THE PULL BOX, THEN SPLICE WITH 3M 78-R SERIES AWG SHIELDED CABLES BACK TO CONTROL CABINET.
4. PIEZO HOMERUNS CAN SHARE THE SAME CUT.
5. PIEZOS AND PIEZO SEALANT (A5 475) ARE PROVIDED BY ATS.
6. LOOP DLC IMSA 50-2, 14 AWG 2 CONDUCTOR WITH BARE DRAIN WIRE.

DETAIL "B"

PIEZO LOOP PIEZO

3M™ Resin Splices 0-600V (1000V rated)

3M Scotchcast™ Reenterable Inline and Tap Splice Kits 78-R Series

Scotchcast 78-R series kits make inline or tap splices on shielded or nonshielded, plastic- and rubber-jacketed, signal and control (or power) cable rated up to 1 kV. Connectors are not included, order separately. Refer to the "Terminals, IDCs and Wire Connectors" section for ordering information. Each kit makes one splice.

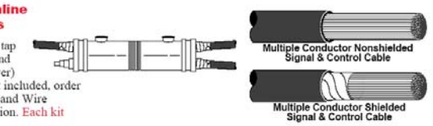

Scotchcast Selection 78-R Series

Product Series	UPC (054007-)	Kit Size I.D. x L	Cable O.D. Range Run	Cable O.D. Range Tap	Case Qty.
Multiple Conductor Nonshielded Signal & Control Cable, Multiple Conductor Shielded Signal & Control Cable See above for cable type illustrations.					
78-R1	02411	2 x 12" (5,1 x 30,5 cm)	0.25 - 1.00" (6 - 25 mm)	0.25 - 1.00" (6 - 25 mm)	1
78-R2	02412	2 x 24" (5,1 x 61,0 cm)	0.25 - 1.00" (6 - 25 mm)	0.25 - 1.00" (6 - 25 mm)	1
78-R3	02413	3 x 24" (7,6 x 61,0 cm)	0.50 - 1.50" (13 - 38 mm)	0.50 - 1.00" (13 - 25mm)	1
78-R4	02414	4 x 24" (10,2 x 61,0 cm)	0.50 - 2.00" (13 - 51 mm)	0.50 - 1.75" (13 - 44 mm)	1
78-R5	02417	5 x 26" (12,7 x 66,0 cm)	1.00 - 2.50" (25 - 64 mm)	1.00 - 2.50" (25 - 64 mm)	1

Scotchcast Connector Selection 78-R Series

Scotchlok™ Connectors																		
	Insulated Butt Connectors						Pigtail Connectors						Tap Connectors					
	MV18BC 22-18 AWG		MV14BC 16-14 AWG		MV10BC 12-10 AWG		"Y" 18-12 AWG		"R" 14-10 AWG		557 22-18 AWG		558 22-18 AWG		560 18-14 AWG		562 12-10 AWG	
Kit No.	No. Cond.	No. Pairs	No. Cond.	No. Pairs	No. Cond.	No. Pairs	No. Cond.	No. Pairs	No. Cond.	No. Pairs	No. Cond.	No. Pairs	No. Cond.	No. Pairs	No. Cond.	No. Pairs	No. Cond.	No. Pairs
78-R1	40	20	26	13	16	8	8	4	5	2	15	7	10	5	8	4	6	3
78-R2	66	33	45	22	26	13	20	10	10	5	30	15	20	10	16	8	12	6
78-R3	160	80	110	55	70	35	50	25	28	14	80	40	50	25	40	20	36	18
78-R4	300	150	180	90	110	55	84	42	60	30	142	71	100	50	80	40	68	34
78-R5	550	275	320	160	200	100	174	87	120	60	260	130	200	100	160	80	130	65

Note: Above figures based on IMSA cable specifications.

Scotchcast Spacer Web 7820

Scotchcast spacer web is for use with the 78-R series splice kits after re-entry. It is a loosely woven polyester that keeps the splice bundle away from the mold body wall, providing even compound distribution around the splice.

Scotchcast Spacer Web 7820 Selection

Product Series	UPC (054007-)	Size/Roll	Case Qty.
7820	02415	Two 3" x 20' rolls/box (76 mm x 6,1 m)	1

3M Splices Low Voltage 0-600V (1000V rated) - Resin

253

DETAIL "C"

COUPLER DETAIL

ATS American Traffic Solutions

14861 N. SCOTTSDALE ROAD, SUITE 109
SCOTTSDALE, ARIZONA 85254 USA
TEL: (480) 368-0900 FAX: (480) 607-0901

NEW ORLEANS

REDLIGHT PHOTO ENFORCEMENT PROGRAM

INTERSECTION PLAN OF:
ATS STANDARD DETAILS

DRAWN BY: AA	DATE: 4-11-08	SCALE: NTS	JOB NO.: 1080	SHEET NO.: 18 OF 20
DESIGNED BY: AA				
ENGINEER: RBZ				

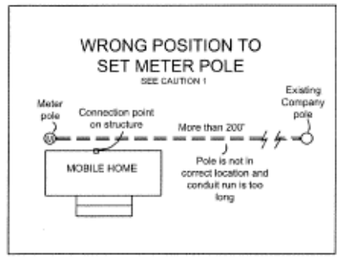

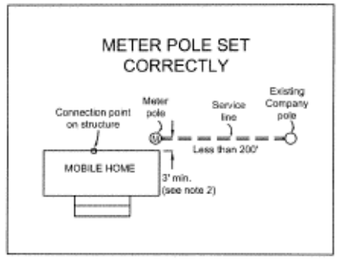

CAUTION 1: Maximum length is 200'. For longer lengths contact the company (see note 3). This may involve additional costs to the customer.

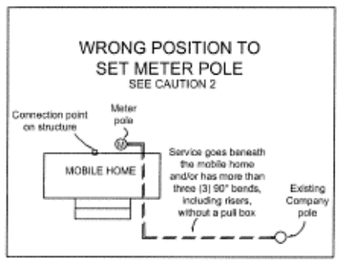

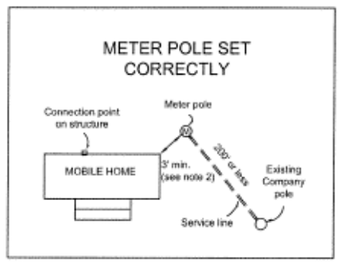

CAUTION 2 : For a conduit installation having more than three (3) 90° bends, including bends in conduit on meter pole and utility pole, an approved pull box may be required (see note 3). This may involve additional cost to the customer. Company owned or maintained underground service shall not be installed beneath a mobile home or any other structure (see note 4).

Call 48 Hours Before You Dig
1-888-258-0808

In locations with underground facilities, the Customer shall notify One Call and shall have One Call locate all underground facilities before digging. It shall be the responsibility of the Customer to stay clear of all underground facilities.

Notes:
1. Customer facilities shall comply with Company Standards, the National Electrical Code, and authorities having jurisdiction.
2. Meter pole shall be more than 3' from the mobile home (see drawing SS8.6-6 Meter Clearances).
3. It is recommended that the customer contact the company prior to the installation of the conduit system.
4. Company owned or maintained underground service shall **not** be installed beneath a mobile home or any other structure.
5. The customer is responsible for clearing and maintaining all right of way.

NO.	DATE:	REVISION	BY:	APPR:
1	2/05	UPDATED: CUSTOMER INSTALLATION STANDARDS TEAM	DAT	

ENTERGY SERVICES, INC.

Underground Service Details for Single Mobile Home Installation

APPROVED BY:	JRH	DATE:	March 2002
CHECKED BY:	LKE	SCALE:	None
DRAWN BY:	DAT		

Entergy — No. SS4.6-4 — PLOT 1=1 — SH. 1 OF 1

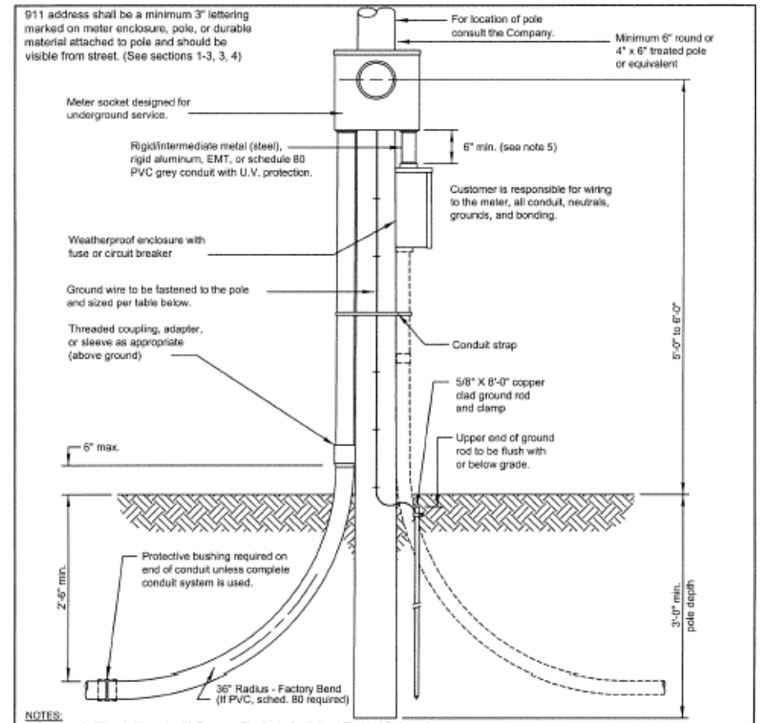

NOTES:
1. Customer facilities shall comply with Company Standards, the National Electrical Code, and authorities having jurisdiction.
2. All conduit connections to be raintight.
3. When installing conduit system, customer shall extend conduit to pole or underground system. Consult the company for details. (See drawings SS8.6-2 and SS8.6-3).
4. Location of underground cables shall be identified prior to digging.
5. If the conduit between the meter socket and the main disconnect is not metal, a bonding ground is required (see section 13.5).

Minimum Customer Wiring Size - Family Residence Single Phase

METER SIZE	CONDUIT SIZE	Current carrying & neutral wire size (per NEC)		GROUND WIRE SIZE
		ALUMINUM	COPPER	
100 Amp	2"	#2	#4	#6 *
200 Amp	2.5" ***	4/0	2/0	#4 **
320 Amp	3"	Consult NEC		

See NEC 310.15(B) (6) - phase conductors: NEC 220.61 - Neutral, and NEC 250.66 - Ground Wire
* Wire smaller than #6 must be protected from physical damage (see NEC 250.120C)
** For sole connection to rod, plate or pipe type electrode #6 AWG Cu is allowed (see NEC250.66A)
***** Arkansas locations only allows 2"**

NO.	DATE:	REVISION	BY:	APPR:
4	2/05	UPDATED: CUSTOMER INSTALLATION STANDARDS TEAM	DAT	
3	4/02	UPDATED: CUSTOMER INSTALLATION STANDARDS TEAM	DAT	
2	5/99	UPDATED PER SERVICE STANDARDS TEAM	TKV	
1	6/98	UPDATED PER SOLUTION GROUP RECOMMENDATIONS	MCC	

Call 48 Hours Before You Dig
1-888-258-0808

In locations with underground facilities, the Customer shall notify One Call and shall have One Call locate all underground facilities before digging. It shall be the responsibility of the Customer to stay clear of all underground facilities.

ENTERGY SERVICES, INC.

DETAILS FOR TYPICAL SINGLE PHASE UNDERGROUND SERVICE TO A MOBILE HOME

APPROVED BY:	JDS	DATE:	APRIL 1998
CHECKED BY:	LKE	SCALE:	3/4"=1'-0"
DRAWN BY:	WINK-AJC		

Entergy — No. SS4.6-3 — PLOT 1=1 — SH. 1 OF 1

DETAIL "A"
ENTERGY POWER SPEC.

NOTES:
1. PHOTO ENFORCEMENT SIGN
2. SIGN TO BE PLACED 300 FT. TO 500 FT. FROM STOP BAR
3. FLAT SHEET ALUMINUM HIGH INTENSITY .100
4. SEE LA DOTD STANDARD DETAIL FOR SIGN POST MOUNTING
5. SEE LA DOTD STANDARD DETAIL FOR UNIVERSAL ANCHOR SYSTEM FOUNDATION.

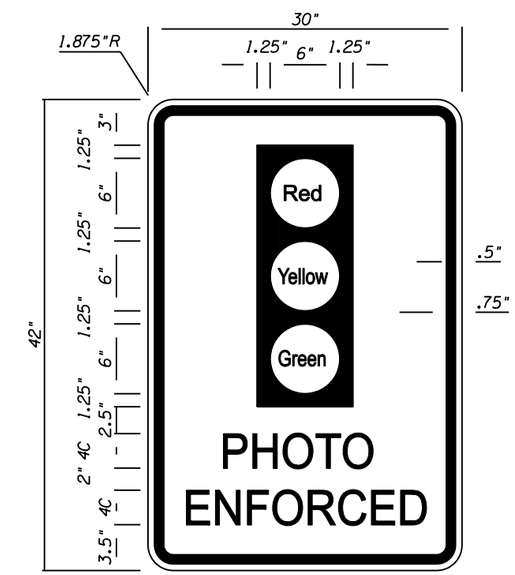

DETAIL "B"

PHOTO ENFORCEMENT SIGN

American Traffic Solutions

14861 N. SCOTTSDALE ROAD, SUITE 109
SCOTTSDALE, ARIZONA 85254 USA
TEL: (480) 368-0900 FAX: (480) 607-0901

NEW ORLEANS

REDLIGHT PHOTO ENFORCEMENT PROGRAM

INTERSECTION PLAN OF:
ATS STANDARD DETAILS

DRAWN BY: AA	DESIGNED BY: AA	ENGINEER: RBZ	DATE: 4-11-08	SCALE: NTS	JOB NO.: 1080	SHEET NO.: 19 OF 20

These installation instructions for the Measurement Specialties Roadtrax® BL traffic sensor are intended to guide you in the correct installation procedures and should be followed closely.

Please note there may occasionally be local conditions and regulations that require modification, and that additional equipment may be needed for the installation of the inductive loops and any necessary off-road work. In these instances, please contact our technical assistance department at 757-766-4474

Prior to installation, please read the instructions completely and ensure that all required tools and equipment are available.

Required Tools and Equipment

- Safety Equipment (as per local regulations)
- BL Sensors with Installation Brackets (Note: Normal and wide installation brackets are included in the box)
- Encapsulation Material (IRD AS475, ECM P6G, or Global Resin PU260)
- Loop Sealant (NO hot tar)
- PVC or Polyethylene Tubing (home run cables)
- Materials for Inductive Loops (if installed)
- Straight Edge (8' [2.5 m] minimum)
- 20' (6.1 m) Tape Measure
- Pavement Crayons & Pavement Paint
- 1/8" (3 mm) Diameter Cord approximately 20' (6m) in length
- 35hp Wet-Cutting Pavement Saw (self-propelled)
- Diamond Blade (3/4" [20 mm] wide or equivalent)
- Diamond blade (1/4" [7 mm] minimum, for Cutting Home Run Slots.
- Hammer & Masonry Chisels
- Power Washer
- > 500 gal. Water
- Large Capacity Air Compressor (min 150 CFM)
- Street Broom
- Wire Brush
- LCR Meter (BK 875A)
- Steel Wool/Emery Pad
- Alcohol with Lint-Free Cloth
- 2" (5 mm) Duct Tape
- Foam Backer Rod
- Latex Gloves
- Electrical Power or Generator
- Low Speed Mixing Drill
- 2 each mixing paddles
- 3" (80 mm) or 4" (100 mm) wide Putty Knife or Small Masonry Trowel
- Angle Grinder with Masonry Wheel or Belt Sander
- Wire Strippers
- Needle Nose Pliers
- Oscilloscope (recommended)

Installation Instructions

1) Ensure that the road is safely closed, as per local regulations.

2) Using pavement crayons, paint, tape measure and cord, carefully mark the layout of the sensor installation. Ensure sensors are emplaced exactly perpendicular to the flow of traffic and that all lines are straight. Verify that the passive cable length is enough to reach the cabinet. DO NOT SPLICE CABLE IF IT IS TOO SHORT. Typical WIM/Classification site layout with 11' (3.5 m) sensors is shown below.

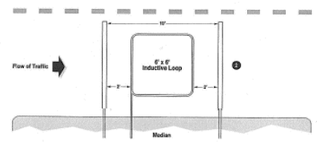

3) Using a 3/4" (20 mm) Diamond Blade, wet cut slot for sensor. Slot must be 3/4"(20 mm) wide (±1/16" or ±2 mm) by 1" (25 mm) minimum deep. Cut slot 8" (200 mm) longer than sensor length (including lead attachment). Drop blade an extra 1/2" (12 mm) down on both ends. Repeat for all sensors.

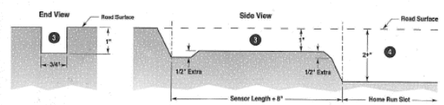

4) Cut home run slots for BL sensors. Center the home run slot on the sensor slot. Home run slots are typically cut the depth of the loop home run slots. The minimum width of the slot needs to be 1/4" (6 mm). Cut it wider if you are using conduit or tubing.

5) Cut all inductive loops sets (if applicable) Note: If inductive loops and home run slots are being dry cut, dry cut these slots and clean the area before wet cutting the BL sensor slots.

6) Power wash and sweep all slots. All slots must be very clean.

7) Dry all slots with compressed air. All slots and the pavement 1' (300 mm) on either side must be completely dry.

8) Place duct tape along length of both sides of the sensor slot. Tape must be 1/8"(3 mm) away from the slot. Repeat for all sensors.

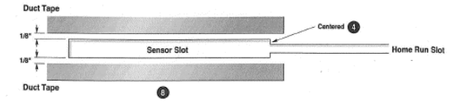

9) Remove BL sensor from box. Visually inspect sensor to ensure it is straight without any twists or curls. Check passive cable for bare wire. Check lead attachment for cracks or gaps. Look at data sheet to ensure the correct sensor is being installed, Class I versus Class II. Again, verify that there is sufficient passive cable to reach the cabinet.

10) Connect sensor up to LCR Meter. Test capacitance and dissipation factor. Test the resistance on the 20mΩ setting. Capacitance should be within ±20% of the enclosed data sheet. Resistance should be >20mΩ. Dissipation factor should be <0.04. Record all results on the data sheet.

11) Place sensor on tape next to the slot. From this point forward, handle the sensor with latex (or equivalent) gloves.

12) Clean sensor with steel wool or emery pad (Scotch Brite®). Wipe down with alcohol and clean lint-free cloth.

13) Place installation brackets on sensor every 6" (150 mm) for the length of the sensor®, use the 3/4" (20 mm) (small) brackets.

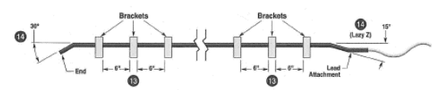

14) Bend the end of the sensor downward at a 30° angle. Bend the lead attachment end down at a 15° angle and then 15° back up until level (forming a lazy Z).

15) Emplace sensor in the slot in the road. The end of the sensor should be at least 2" (50 mm) from the end of the slot, and the tip should not touch the bottom of the slot. The lead attachment should also not touch the bottom or the sides of the slot.

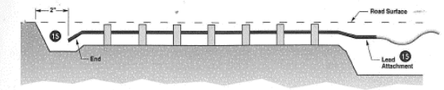

16) If any of the 3/4" (20 mm) (small) brackets do not fit snugly against the sides of the slot or are loose, replace with a 1" (25 mm) (large) bracket and repeat step 15.

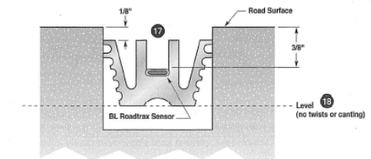

17) Starting at the lead attachment end, position the sensor so that it is 3/8" (9 mm) below the surface of the road using the depth gage enclosed in the box. At this point, the installation bracket is 1/8" (3 mm) below the surface of the road.

18) Visually inspect the length of the sensor to ensure it is at uniform depth along its length and it is level (not twisted, canted or bent).

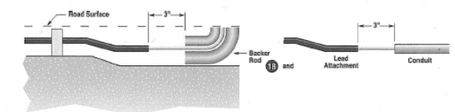

19) Run the passive wire the length of the home run slot. 3" (75 mm) from the lead attachment, place foam backer rod under and over passive cable (inside the slot). This will keep the grout from running out into the deeper home run slot. If the passive cable is put in a conduit, also allow 3" (75 mm) between the lead attachment and the beginning of the conduit.

20) Repeat steps 9-18 for all BL sensors to be installed.

21) Emplace all inductive loops to site specifications (if applicable).

22) Using low speed mixing drill (450 rpm) and a mixing paddle, premix the grout for 2 min or until smooth.

23) Add hardener to grout and mix according to manufacturer's instructions.

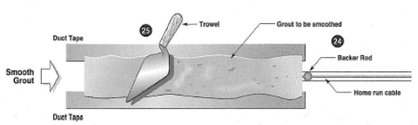

24) Immediately pour grout into slot using a small bead. Using a small bead allows the installer to watch the grout flow under the sensor, eliminating air pockets. Start at the end and pour towards the lead attachment. Repeat until slot is completely full of grout. DO NOT FILL SLOT IN ONE PASS.

25) Using putty knife or trowel, lightly spread (feather) the grout smooth along the length of the slot. Resin should be slightly higher than tape as it will shrink while curing.

26) Remove tape as soon as grout begins to set (2-5 min, depending on grout type and ambient temperature).

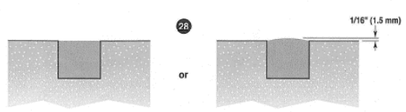

27) Remove backer rod from the slot. Fill in home run cable and inductive loops with loop sealant.

28) Once grout is cured, use an angle grinder or a belt sander to grind/sand the top of the grout flush with the surface.

*29) Wait allotted period to allow loop sealant and grout to fully cure (45 - 60 min) and then open the lane to traffic.

30) Hook up occilliscope to sensors and view wave forms as vehicles pass. Ensure signal is clear without noise.

Example Waveforms

Car

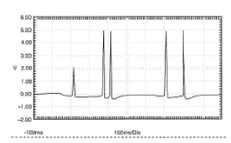

5 Axle Truck

American Traffic Solutions
14861 N. SCOTTSDALE ROAD, SUITE 109
SCOTTSDALE, ARIZONA 85254 USA
TEL: (480) 368-0900 FAX: (480) 607-0901

NEW ORLEANS

REDLIGHT PHOTO ENFORCEMENT PROGRAM

INTERSECTION PLAN OF:
ATS STANDARD DETAILS

DRAWN BY: AA	DATE: 4-11-08	SCALE: NTS	JOB NO.: 1080	SHEET NO.: 20 OF 20
DESIGNED BY: AA				
ENGINEER: RBZ				